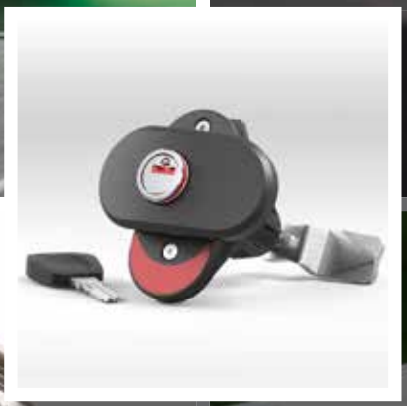

EMKA (UK) LTD

Ingenious Locking Technology for Mobile Homes and Trailers

Product catalogue 2018
V1

Mobile homes

Caravans

Horse trailers

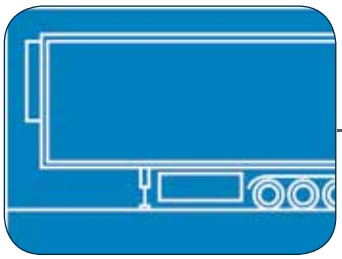

Trailers

Pictograms

The pictograms on the catalogue pages show the special properties of the items presented there.

Information

1 Latches and handles

Door locks 1.1
Flap locks 1.2
Latch locks 1.3
Toggle latches 1.4
Window locks 1.5
Bow-type handles and recessed grips 1.6
Electromechanical locks 1.7

2 Hinges

Hinges for flush doors 2.1
Torque hinges 2.2

3 Gasketings

Declarations 3.0
Glazing profiles with filler 3.1
Gasketings 3.2
Fire protection gaskets 3.3
Edge protection 3.4
Support for tank bands 3.5

4 Accessories

Retractable loops and slinging rings 4.1
Dove tails 4.2
Miscellaneous 4.3

Article number index

List of contents

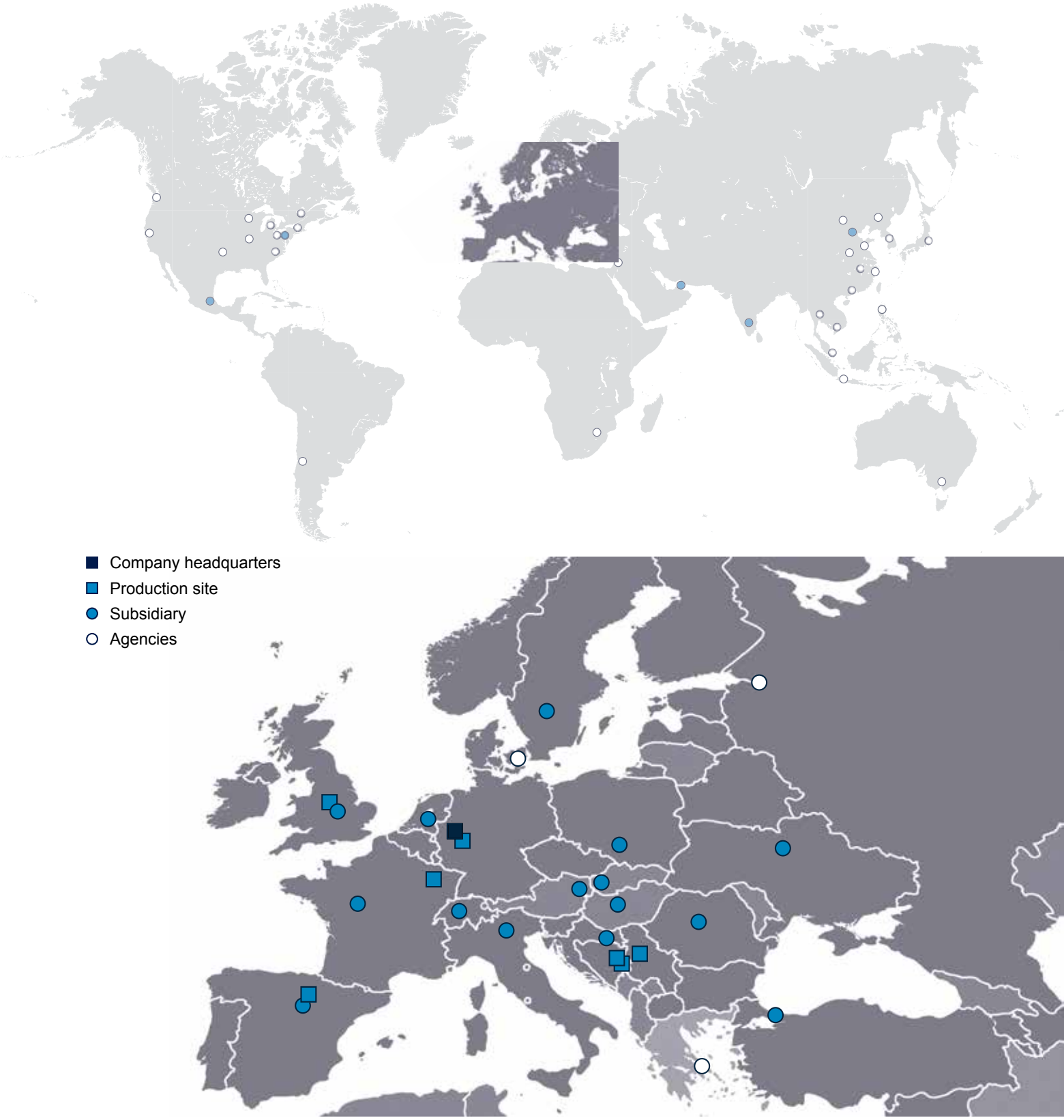

EMKA worldwide

Production in Europe

Company headquarters Velbert, Germany

Goražde (Plant 1), Bosnia-Herzegovina

Wuppertal, Germany

Henriville, France

Arnedo, Spain

Birmingham, UK

Goražde (Plant 2),
Bosnia and Herzegovina

Mionica, Serbia

Sales Worldwide

Kittsee, Austria

Interlaken, Switzerland

Bourré, France

Veghel, Netherlands

Bedzin (Katowice), Poland

Pastrengo, Italy

Arnedo, Spain

Coventry, UK

Jönköping, Sweden

Sibiu, Romania

Middletown, USA

Çerkesli-Dilovşı (Istanbul), Turkey

Tjanjin, China

Bangalore, India

Dubai, UAE

The EMKA GROUP is the world market leader for locking systems, hinges and gasketing that are used in switch and control cabinets. In the areas air conditioning technology and transport, EMKA is one of the leading manufacturers of locking technology.

Currently, the overall range comprises more than 15,000 articles, which are developed, manufactured, refined and assembled at eight production sites in Germany, France, Great Britain, Spain, Bosnia-Herzegovina and Serbia. With 2,100 employees, the company is represented in 52 countries worldwide.

Locks

Hinges

Gasketings

Accessories

Product areas

EMKA offers a comprehensive product range of ingenious locking technology from a single source. The modular program structure allows a unique variety of components.

The high quality and product standards are guaranteed by an excellent manufacturing know-how and by the certified process control according to ISO 9001.

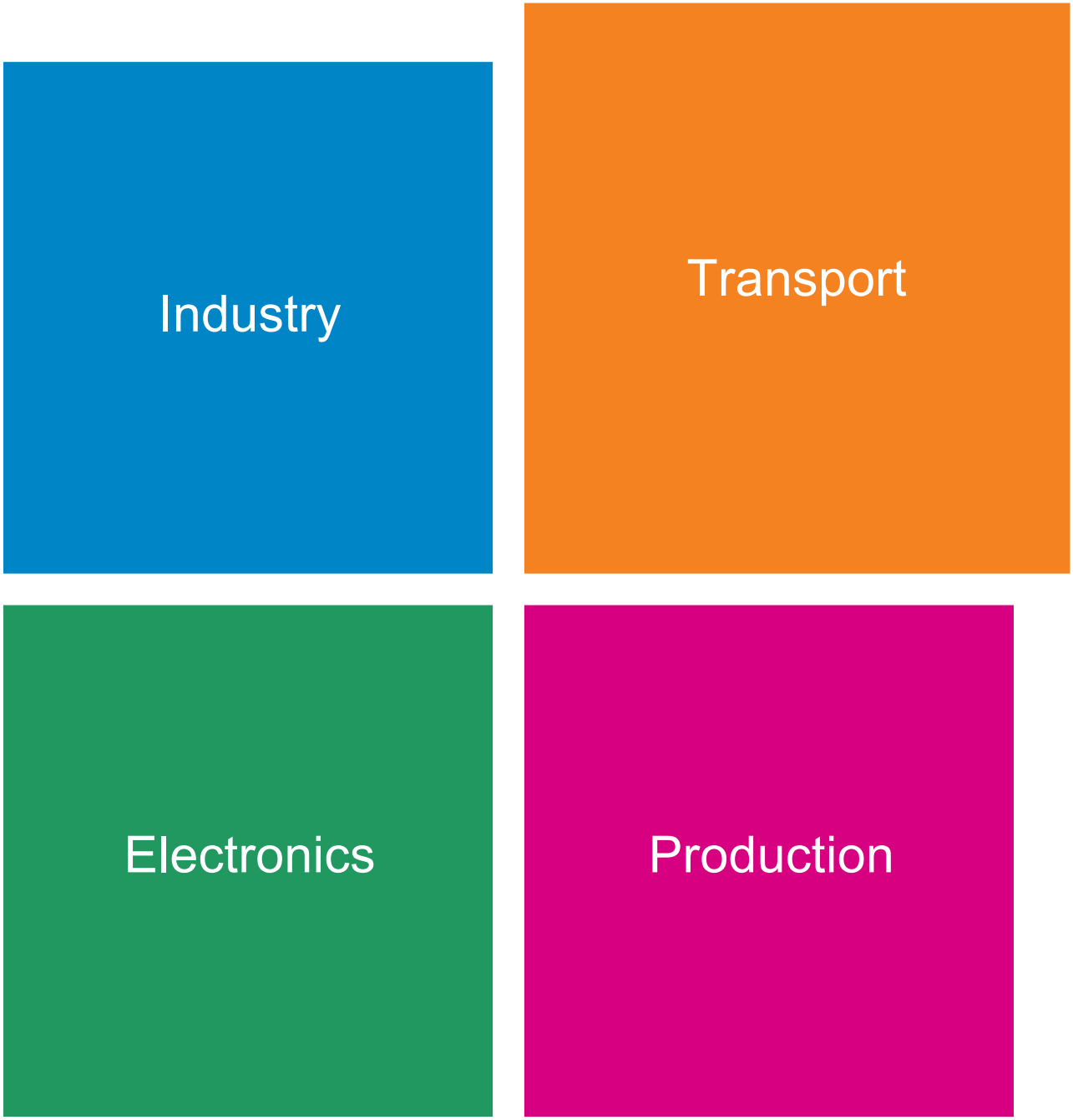

Business units

The EMKA group is divided into four business units which allow a clear focus on individual sectors and taylormade solutions for customers.

With its high level of in-house production, EMKA is in control of the entire production flow in every unit – from the concept to the finished product.

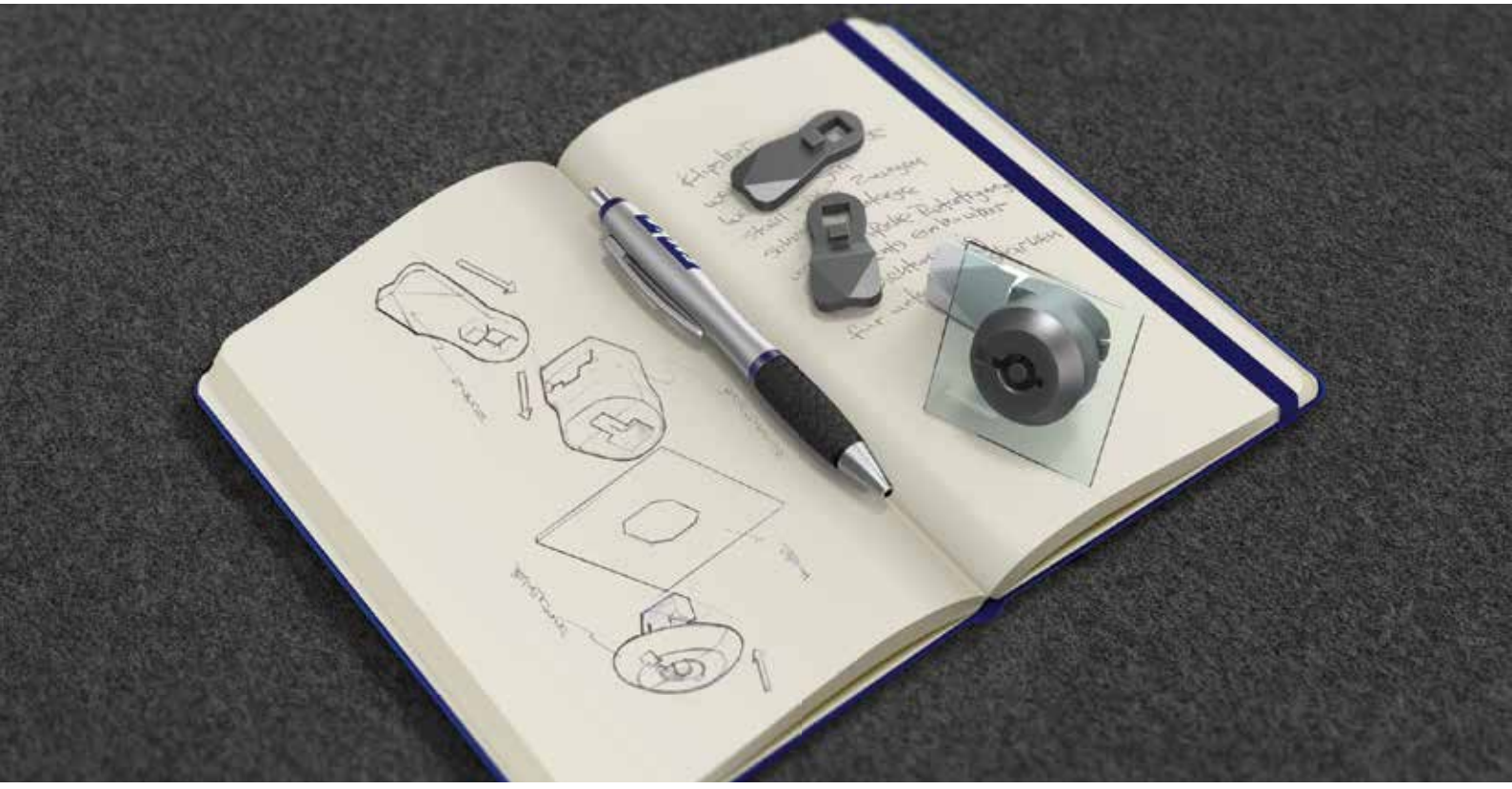

Close communication with the customer from the idea to the product

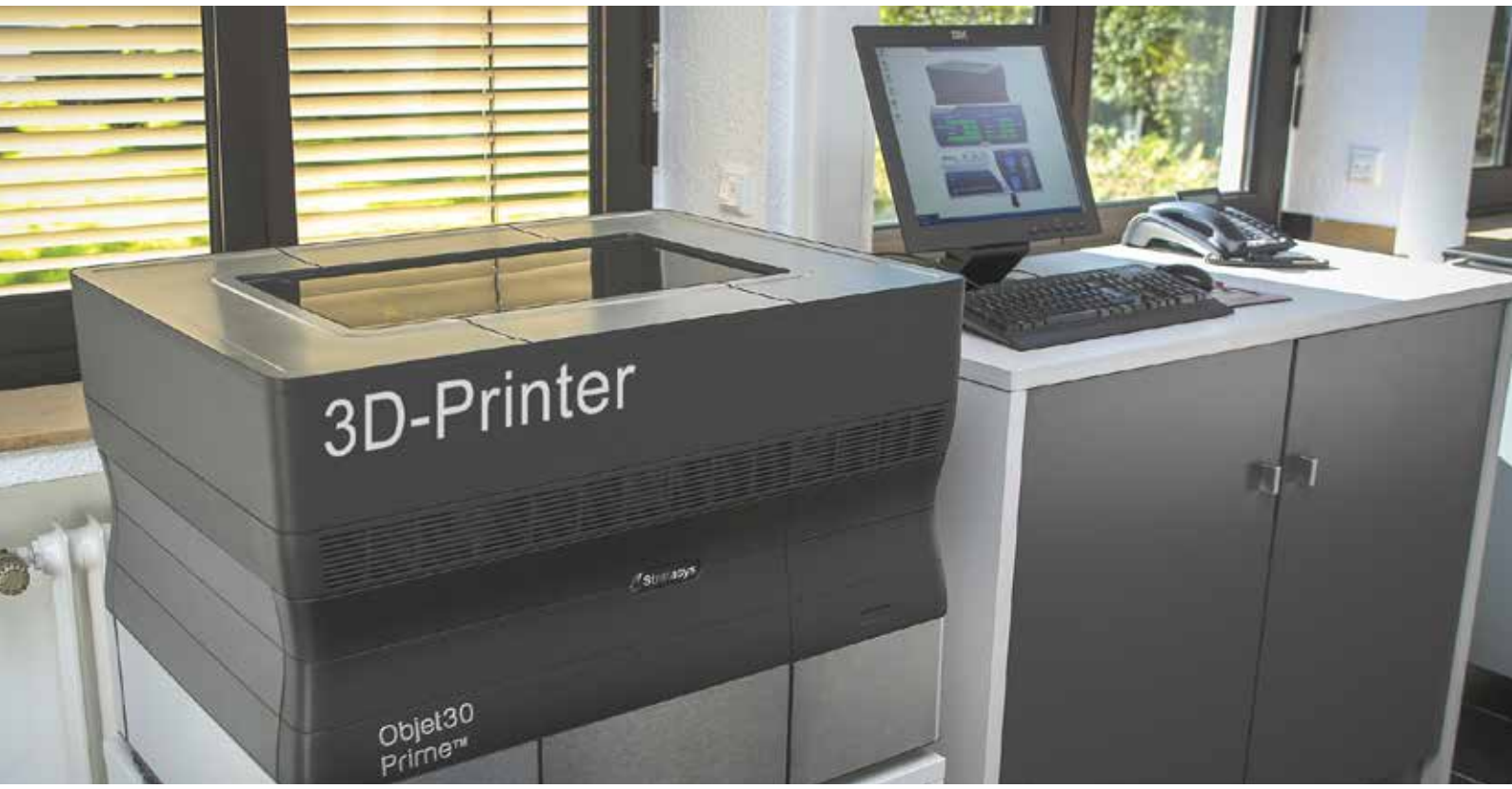

In the EMKA Technology Centre the innovative products of tomorrow are created. 30 designers and design engineers convert ideas into finished products in close collaboration with the customer. Quite a few of these products are incorporated into the EMKA main catalogue which is thus strongly focused on the current market and customer needs. To this day round 20,000 additional special parts have been created in this way that were tailor-made for special customer requirements by our specialists, intensely tested in our internal test lab and finally produced by EMKA.

State-of-the-art CAD systems and development methods such as finite elements method, rapid prototyping and 3D print are only some of the processes that are used in this context. A powerful project management software completes the range of services.

You have got an idea?

Together, let´s make a product out of it!

Injection Moulding

Punching, bending
and metal working

Zinc die Casting

SST Precision Casting

Production from A to Z

PUR foam technology

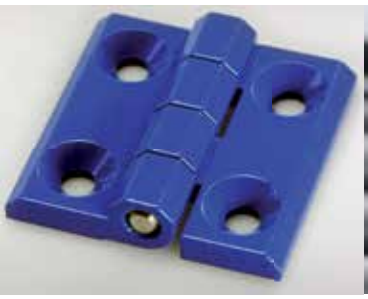

Surface finishing

Extrusion of Profiles

Assembly of profiles

EMKA is an expert not only in stainless steel casting and in injection moulding of zinc and high performance plastics, but also in extruding rubber and plastic profiles.

Other production technologies are stamping, bending, turning, milling, coating, and the final assembly of modular product solutions.

Thus, EMKA sets quality standards in locking technology.

Solutions for the road

For many years, EMKA has been a major partner of the automotive and caravan / motor home industry. In its in-house technology centre, EMKA develops standardised product solutions, as well as customised components and systems for furnishing commercial and special vehicles.

Whether locks, handles, hinges or gaskets for diverse mobile applications: EMKA products always stand for maximum safety and reliability.

Solutions for the road

Special vehicles for horse- and freight transport, road construction, agriculture and forestry, emergency services and disaster control, are exposed to particularly harsh conditions. Wetness, dirt, temperature fluctuations, vibrations and permanent load make extraordinary quality demands for the installed components.

The locking systems of EMKA are designed for these special demands.

According to DIN EN 61373 vibrationproof designed locks, undetachable foamed seals, as well as various materials and surfaces, are available with many standard solutions.

The large production depth of EMKA makes the delivery of the complete locking system, consisting of lock, hinge and gasket as well as useful accessories, possible.

BMW

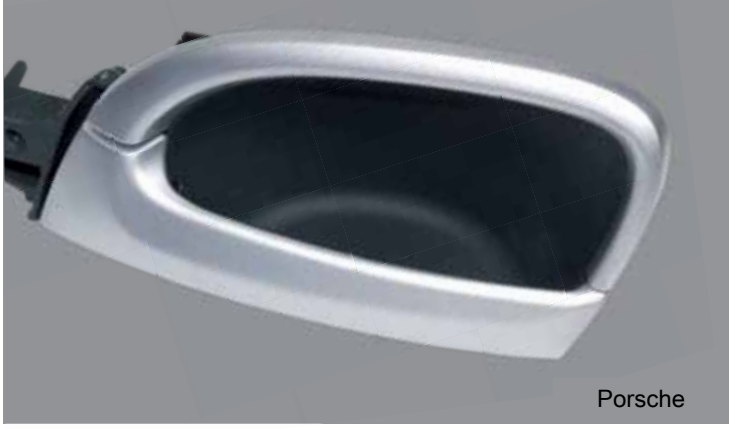
Porsche

Ferrari

Porsche

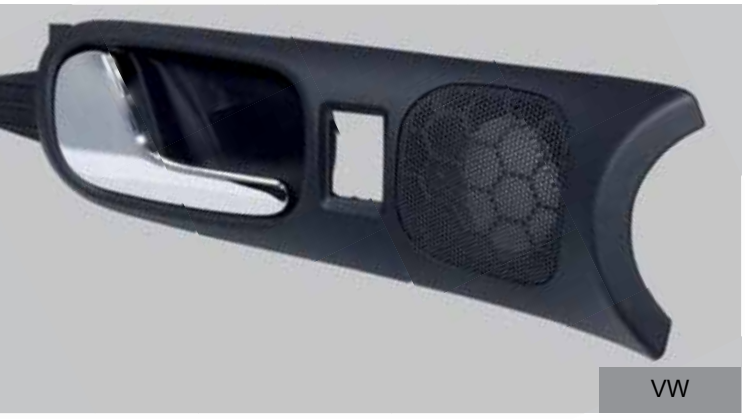
VW

Bentley

Aston Martin

Solutions according to customer drawings

1 Engine compartment seal
2 Front shield frame
3 Roof gap seal
4 Sunroof seal
5 Back window frame
6 Glass run seal
7 B-pillar seal
8 Encapsulated quarter window
9 Trunk seal
10 Waist belt seal (interior/exterior)
11 Door seal
12 Sillboard seal

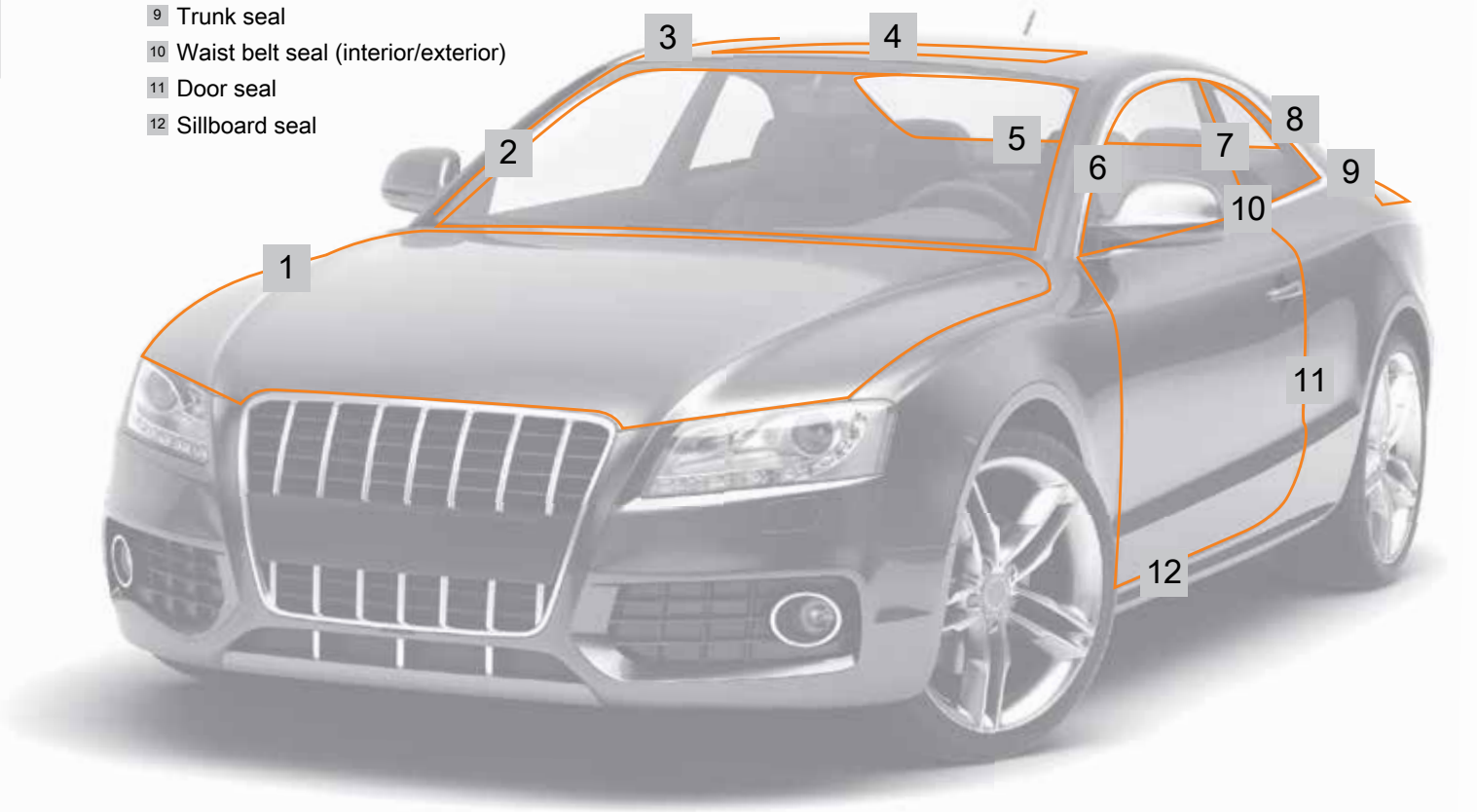

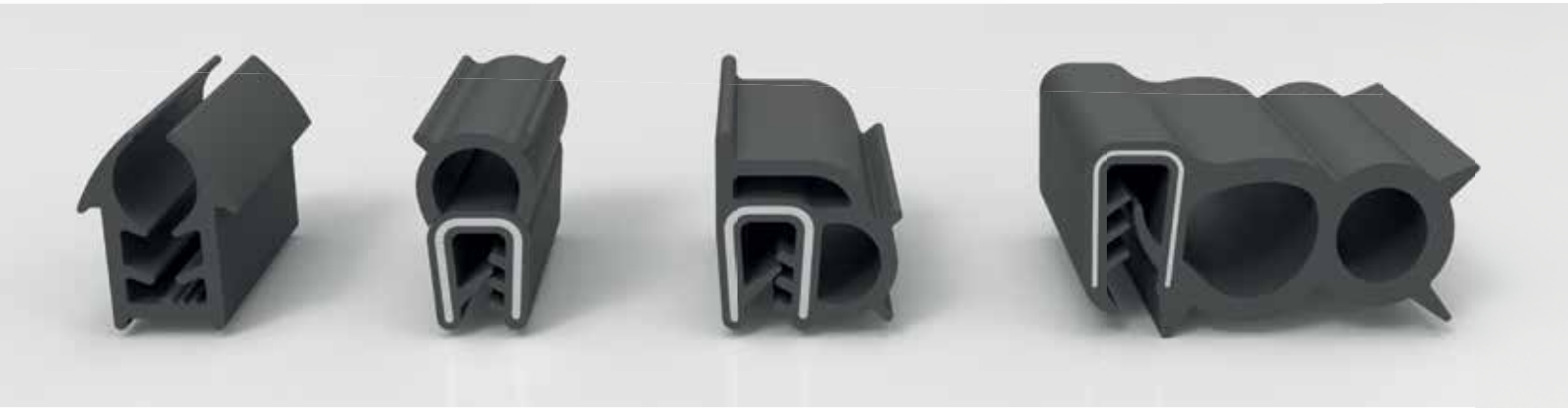

Besides 15,000 of our own catalogue articles, EMKA also offers individual manufacturing according to a customer drawing. An ultra-modern machinery and an extensive know-how in different manufacturing technologies allow maximum material and variant diversity.

EMKA offers a wide range of customized rubber profiles, support profiles, hollow section sealing and lip seals in a wide variety of hardnesses. Loops and roll editing tape, stamped steel and reinforcements of textile fibres can be additionally incorporated.

In further processing, it is possible to manufacture fixed lengths, rings and corner frames. Applying adhesive, bonded coating or flocking, complete the offer.

DNV·GL

MANAGEMENT SYSTEM ZERTIFIKAT

Zertifikat-Nr.:
194710-2016-AQ-GER-DAkkS

Datum der Erstzertifizierung:
16. Februar 2013

Gültig:
16. Februar 2016 - 15. September 2018

Hiermit wird bescheinigt, dass das Unternehmen

EMKA Beschlagteile GmbH & Co. KG
Langenberger Str. 32, 42551 Velbert, Deutschland

Managementsysteme in Übereinstimmung mit diesen Standards eingeführt hat:

ISO 9001:2008
ISO 14001:2004

Dieses Zertifikat ist gültig für die folgenden Produkt- oder Dienstleistungsbereiche:

Entwicklung, Herstellung und Vertrieb von mechanischen / elektronischen Verschluss- Systemen; Scharnieren, Kunststoffspritz- , Automatendrehteilen und Sonderanfertigungen. Management des Herstellungsprozesses von Dichtungen und Druckgussteilen.

Ort und Datum:
Essen, 11. Februar 2016

DAkkS
Deutsche Akkreditierungsstelle
D-ZM-18453-01-00

Zertifizierungsstelle:
DNV GL - Business Assurance
Schnieringshof 14, 45329 Essen, Germany

Thomas Beck
Leiter Zertifizierungsstelle

Bei Verstoß gegen die im Zertifizierungsvertrag genannten Bedingungen kann das Zertifikat seine Gültigkeit verlieren.
AKKREDITIERTE STELLE: DNV GL Business Assurance Zertifizierung und Umweltgutachter GmbH, Schnieringshof 14, 45329 Essen, Germany.
TEL: +49 201 7296-222. www.dnvgl.de/assurance

Quality assurance

DNV·GL

MANAGEMENT SYSTEM CERTIFICATE

Certificate No:
194710-2016-AQ-GER-DAkkS

Initial certification date:
16. February 2013

Valid:
16. February 2016 - 15. September 2018

This is to certify that the management system of

EMKA Beschlagteile GmbH & Co. KG
Langenberger Str. 32, 42551 Velbert, Germany

has been found to conform to the Management System standards:

ISO 9001:2008
ISO 14001:2004

This certificate is valid for the following scope:

Development, manufacturing and sales of mechanical / electronic locking systems; hinges, injection moulded parts, robot turned parts, specially manufactured products. Management of the production process of gaskets and die casting products.

Place and date:
Essen, 11. February 2016

DAkkS
Deutsche Akkreditierungsstelle
D-ZM-18453-01-00

For the issuing office:
DNV GL - Business Assurance
Schnieringshof 14, 45329 Essen, Germany

Thomas Beck
Technical Manager

Lack of fulfilment of conditions as set out in the Certification Agreement may render this Certificate invalid.
ACCREDITED UNIT: DNV GL Business Assurance Zertifizierung und Umweltgutachter GmbH, Schnieringshof 14, 45329 Essen, Germany.
TEL:+49 201 7296-222. www.dnvgl.de/assurance

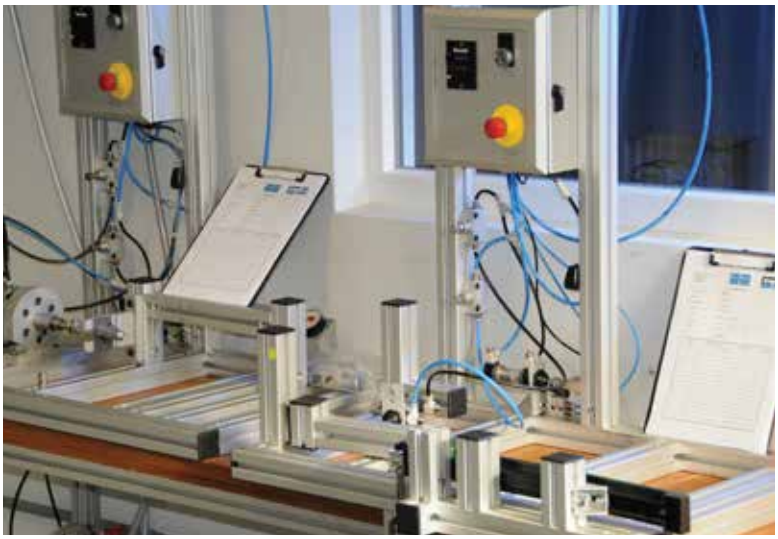

The high quality and product standards are guaranteed by excellent manufacturing know-how and by the certified process control according to ISO 9001.

The in-house tool and mould making as well as state-of-the-art development, manufacturing and testing methods ensure a maximum of product quality and reliability.

Double Red Basic

- New, cost-optimized variants of the well-known compression latch „Double-Red“ by omitting of the optic opening indicators
  - ▸ Variant in white for a special look
  - ▸ Variant in black made of eco-material
- Rotary handle exclusively lockable in closed state
- Robust solution for many years of use
- Tamper and vibration-proof according to DIN EN 61373
- Patented
- See page 1.2-120

ePush Lock

- Locking solution without visible components on the outside
- Opening and closing by pressing the flap / door
- No interruption of the outer sealing due to mounting at the inside
- Integrated emergency opening on the locking element
- Capable for central locking through integrated electronics
- Usable as a building block for the alarm monitoring of the flap
- Distance adapter & protective cover optionally available
- See page 1.7-120

eCam

- Universal, electromechanical latch for all type of cam locks
- Small installation dimension
- Easy installation in new and existing systems
- With mechanical emergency opening
- Locking / Unlocking via stand alone solution with keypad or RFID card reader
- Integrable into access control systems or machine controls
- See page 1.7-110

Single Point Latch

- Usable in various applications as a concealed look
- Available in 4 different types
- Wide supply voltage range (9 ... 32 V)
- Potential-free switch for remote monitoring of latch status
- Emergency opening via bowden cable in case of power failure
- See page 1.7-130

New products at a glance

Handle-System

- Surface mounted lifthandle with led-through spindle
- Suitable for doors opening inwards and outwards
- Roller Cam with Adjustable Clamping Load
- Variety of locking options (round cylinder, blind plug, square insert, further inserts on request)
- Various cam types available
- Air Tightness class L1-L3 possible
- Modular Design
- Protected design
- See page 1.3-132

Bow-type handle

- Ergonomic bow-type handle made of reinforced polyamide
- Mounting of the bow-type handle by choice. The use of cylinder head screw, hexagon head screw, countersunk screw or nuts can be accommodated, depending on the version
- Handle and cover are available in color and / or antibacterial version (on request)
- Bow-type handle also without cover used
- Protected design
- See page 1.6.105

180° Gear hinge

- High quality gear hinge
- Economic structure & design
- Compact construction
- Concealed, not visible
- 180° opening angle
- Right and left usable
- For doors / flaps up to 40 kg (4 hinges)
- System related, small clearance
- Fixing function optional
- Maintenance-free
- Patented
- See page 2.1-200

90° 3D Hinge

- Space-optimized, solid hinge for vehicle rampsand flaps
- Economic structure & design
- Integrated 3D adjustment with comfortable settings by eccentric discs
- Right and left usable
- Concealed hinge with low mounted height
- For commercial vehicles
- Opening angle 90°
- See page 2.1-210

Compression Latch-Hinge large

- For all door sizes > 0,8 m² surface
- The favorable pivot point of the handle allows for low actuation forces a seal compression of 5 mm
- When the door is closed, the latch is adjustable (3 mm) to achieve perfect alignment
- Door or panel can be removed by unlatching the handles on both sides
- Hinge 180° opening angle
- 3D Adjustable (tolerance compensation)
- Available with or without pressure relief
- Patent submitted
- See page 2.1-184

Compression Latch-Hinge small

- For all door sizes < 0,8 m² surface
- 40 % reduced size → significant price advantage
- Compression (5 mm) with low opening & closing force
- Door or panel can be removed by unlatching the handles on both sides
- Hinge 180° opening angle
- 2D Adjustable (tolerance compensation)
- Available with or without pressure relief
- Patent submitted
- See page 2.1-186

As a long-time system partner of the caravan industry EMKA is constantly working on new and innovative products.

In addition to newly developed and enhanced locking solutions, EMKA complements its product portfolio with electronic locks, special hinges, handles and gasketings, thus responding to the current requirements of the market.

EMKA already has the trends that will become the standard tomorrow!

EMKA®
Beschlagteile

1 Latches and handles

2 Hinges

3 Gasketings

4 Accessories

Door locking system: 2-point-locking

PROGRAM 2004

CATIA system image

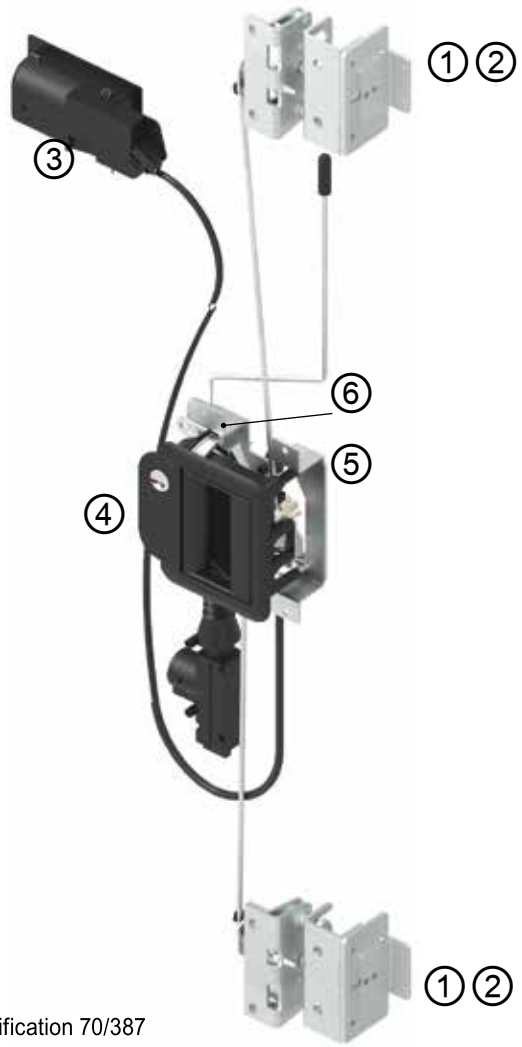

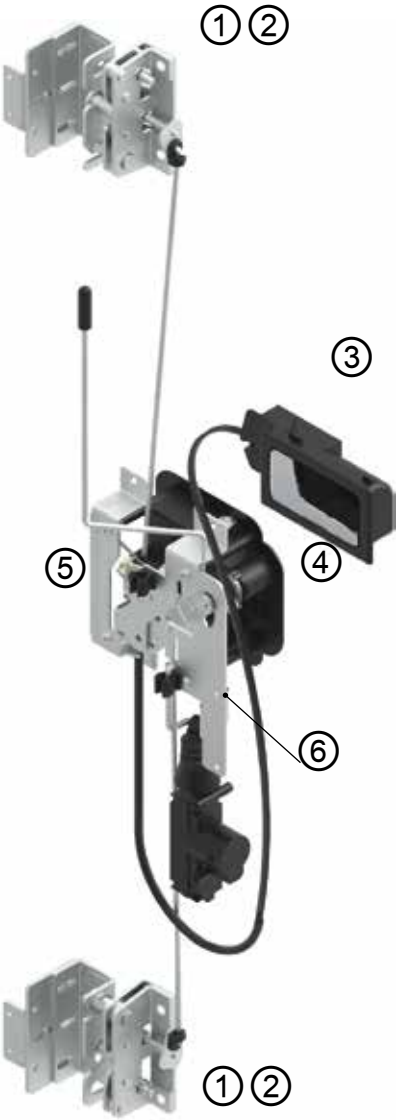

① rotary latch lock
② striking plate
③ interior handle
④ exterior handle
⑤ mounting bracket
⑥ lock shackle

A door locking system

Technology

- M1 tested locking system, according to EU specification 70/387
- two rotary latch locks to be positioned freely, hence double security
- Automotive interior door release, zinc die chrome plated, can be positioned freely
- Breakup assurance by exterior handle with freewheel clutch
- Exterior handle prepared for clip-in cylinder
- Emergency opening from the interior

Handling

- ergonomically designed actuators
- special smooth-running operation
- low closing force, hence very quiet
- with central locking, comfortable and secure

Versions

- colours as per request
- also available as M1 tested locking system with rotary latch lock
- Interior door release with galanized surface in alu matt-finished look
- designed for clip-in cylinder, compatible with clip-in cylinder system 3
- optionally with positioning element for central locking
- Bowden control and round rods Ø4 available on request

© EMKA Beschlagteile GmbH & Co. KG • 2018 • www.emka.com

Door locking system: 2-point-locking

PROGRAM 2004, 5177

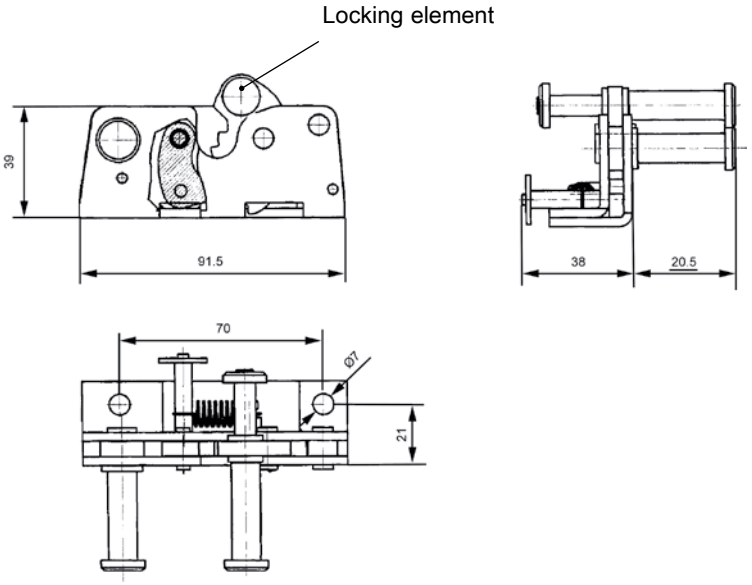

①

②

① Rotary latch lock m.s. zinc plated; with spring	
right, as depicted	2004-B8036
left, mirror image	2004-B8031
② Strike plate St zinc plated	
right, as depicted	2004-B8034
left, mirror image	2004-B8027
Fastening clamp polyamide black	
	2004-5060-783

Further parts see page

– Inside handle	see below
– Exterior handle	1.1-128
– mounting bracket	1.1-128
– lock shackle	1.1-128

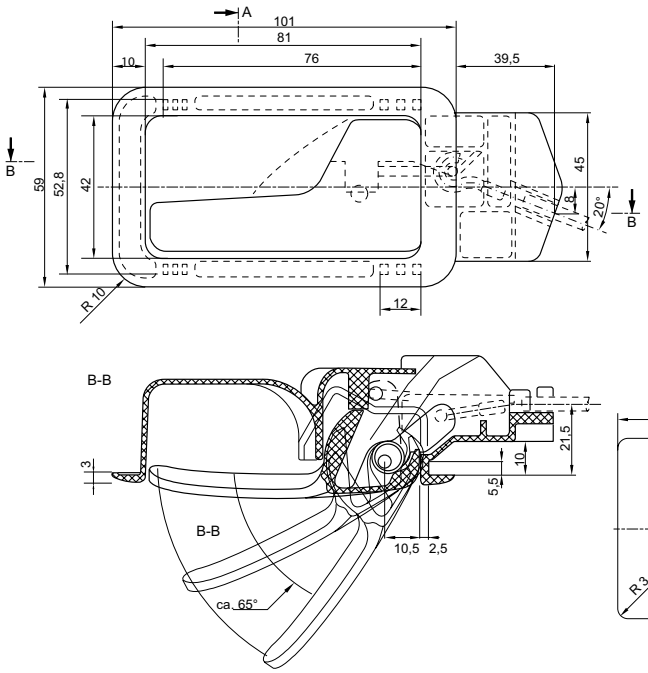

③

left, mirror image

Note:
The cut out is to be adjusted to the respective application

On request:
– further colours

Interior handle polyamide GF black; handle zinc die matt chrome-plated; with spring	
LH	5177-U201-AA
Bowden cable	
	2004-8001-00

Further parts see page

– Rotary latch lock	see above
– Strike plate	see above
– Exterior handle	1.1-128
– mounting bracket	1.1-128
– lock shackle	1.1-128

© EMKA Beschlagteile GmbH & Co. KG • 2018 • www.emka.com

Door locking system: 2-point-locking

PROGRAM 2004, 5177

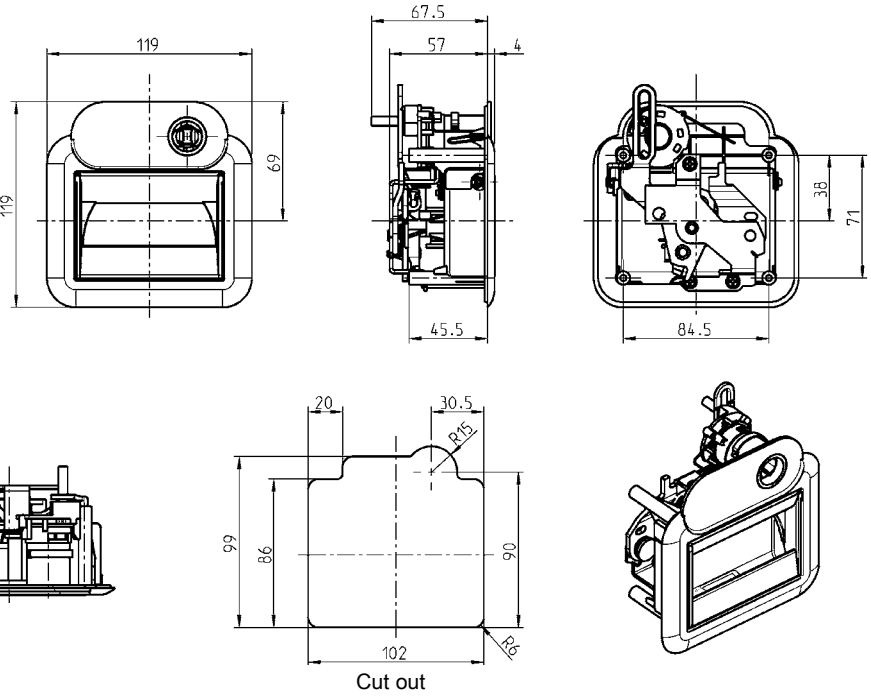

Cut out

Exterior handle polyamide GF black; pivot m.s. zinc plated; pivot arm zinc die zinc plated; with spring	
RH/LH	2004-B8811
Clip-in cylinder 3 zinc die chromated with stainless steel cap; with 2 keys	
keyed 8888	9850-U100
Keyed different	9850-U101
Locking rod m.s. zinc pl.	
	2006-5113-PC
Slide-on cap polyamide black	
	2004-4000-AA

Note:
The cut out is to be adjusted to the respective application

Further parts see page

– Rotary latch lock 1.1-125
– Strike plate 1.1-125
– Inside handle 1.1-125
– mounting bracket see below
– lock shackle see below

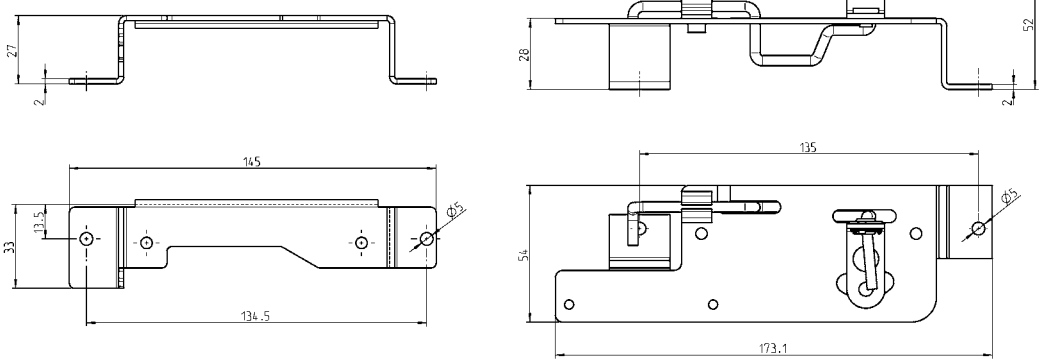

⑤ mounting bracket m.s. zinc pl.	
	9822-5014-JF
⑥ lock shackle m.s. zinc plated; engine rod AISI 304; lever m.s. microcor silver; rod holder and spherical bearings polyamide	
	2004-B8825
rod holder polyamide black	
	2004-4001-AA

Further parts see page

– Rotary latch lock 1.1-125
– Strike plate 1.1-125
– Inside handle 1.1-125
– Exterior handle see above

© EMKA Beschlagteile GmbH & Co. KG • 2018 • www.emka.com

Interior lock; exterior handle

PROGRAM 5271

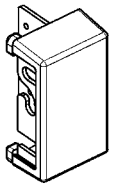

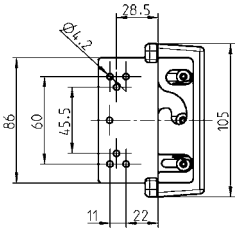

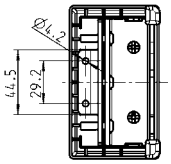

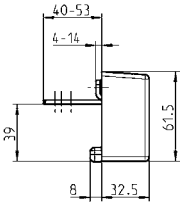

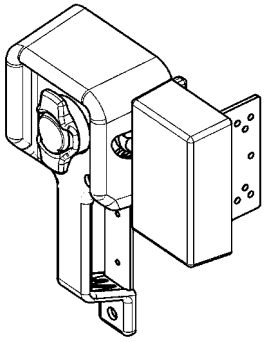

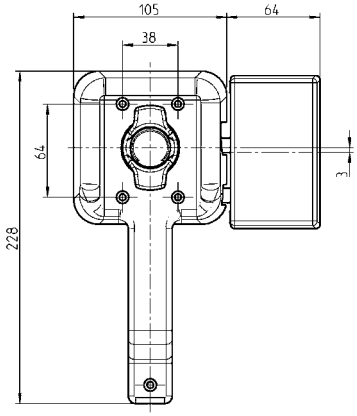

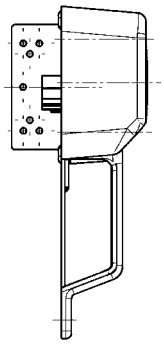

Interior lock polyamide black; apron m.s. zinc plated; clamp m.s. zinc plated; covering cap polyamide black; with spring	
Door thickness = 30; right	9400-U218-AA
Door thickness = 30; left	9400-U219-AA

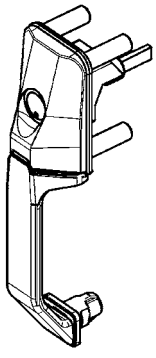

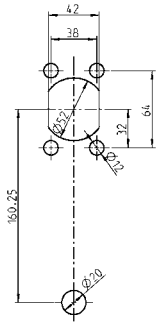

Cut out

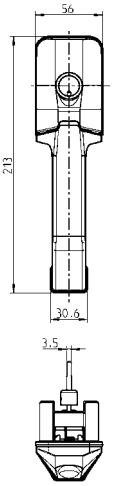

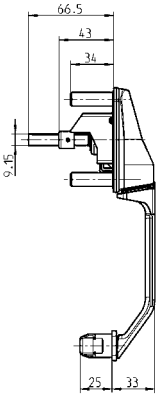

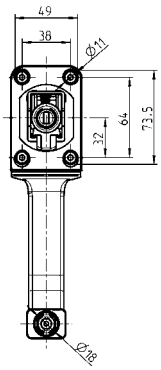

Exterior handle for clip-in cylinder polyamide GF black; pivot arm, cap and handle housing POM; bush zinc die zinc plated; tappet zinc die chromated; with seal and spring	
RH	5271-U600-AA
LH	5271-U601-AA
Clip-in cylinder 3 zinc die chromated with stainless steel cap; with 2 keys	
keyed 8888	9850-U100
Keyed different	9850-U101

© EMKA Beschlagteile GmbH & Co. KG • 2018 • www.emka.com

Interior lock

PROGRAM 5064

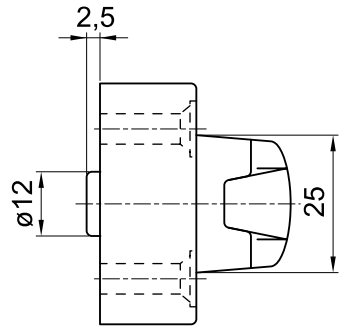

- with inside handle and locking device

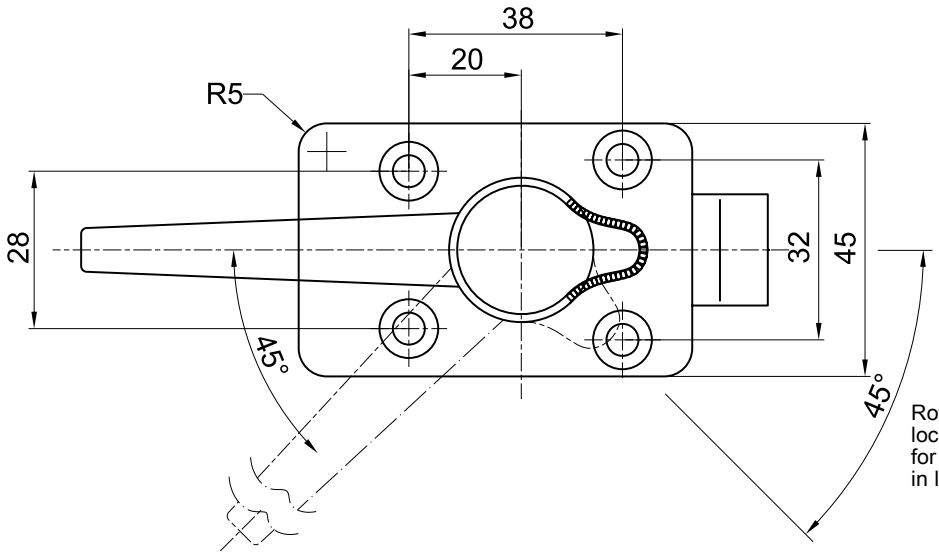

Rotation of the safety catch for locking or rather unlocking or for the locking of the catch bolt, in locked position

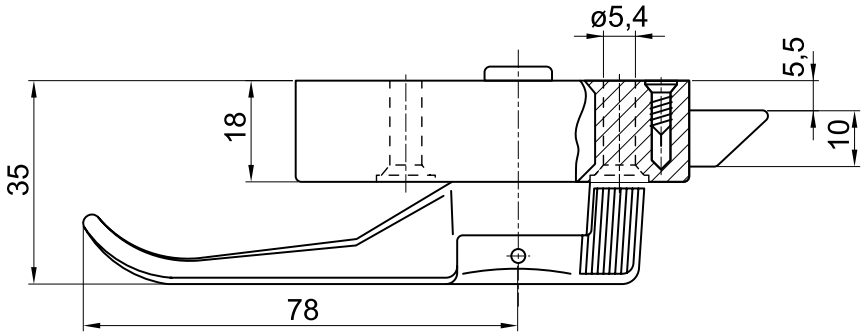

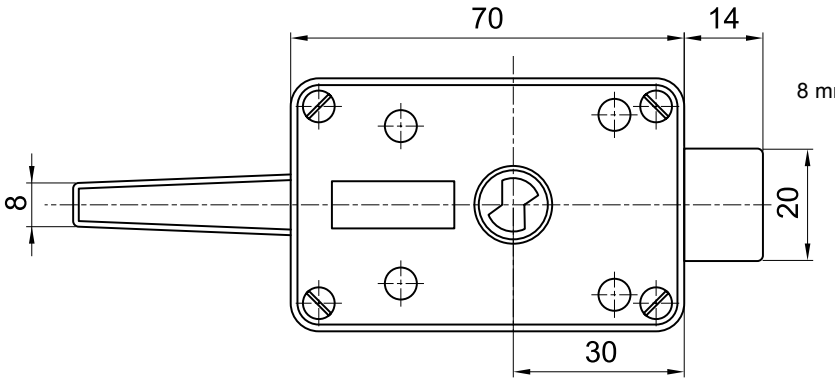

8 mm catch movement

Interior lock zinc die chrome plated; inside handle alu polished; locking device plastic	
	5064-U647-IK

© EMKA Beschlagteile GmbH & Co. KG • 2018 • www.emka.com

Interior lock

PROGRAM 5131, 9301

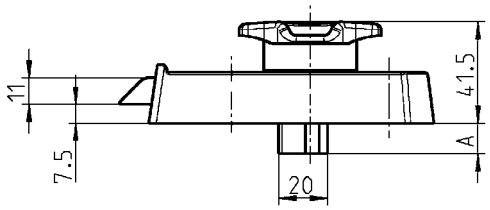

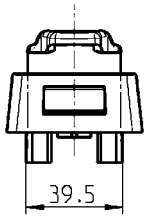

- available in various colours
- Locking block ordered separately
- RH and LH applicable

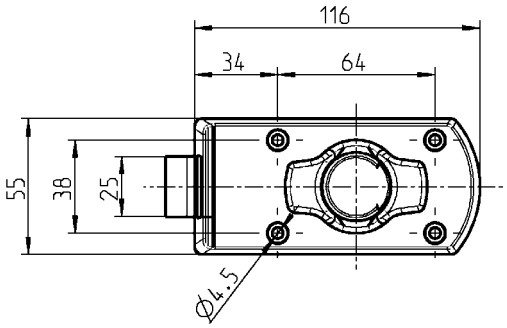

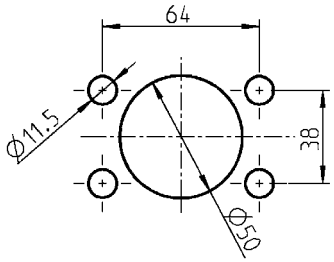

Cut out

Interior handle polyamide black; pivot stainless; plate and screws zinc plated; with spring			
for exterior handle (1) or (2)	**A**	**LH**	**RH**
Door thickness = 31 - 35; for (2)	6,5	9301-U803-AA	9301-U802-AA
Door thickness = 32 - 36; for (1)	12,5	9301-U813-AA	9301-U812-AA
Door thickness = 35 - 39; for (2)	10,5	9301-U805-AA	9301-U804-AA
Door thickness = 39 - 43; for (2)	14,5	9301-U815-AA	9301-U810-AA

Further parts see page

– Exterior handle (1) 1.1-130
– Exterior handle (2) 1.1-160
– Handle plate 1.1-170
– Bottom plate 1.1-170

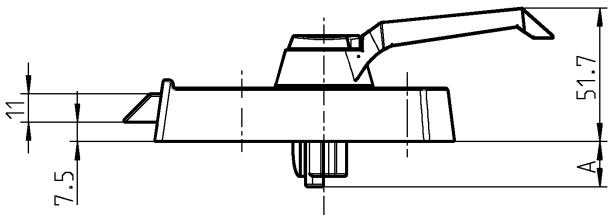

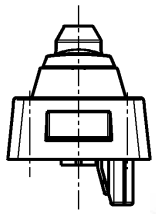

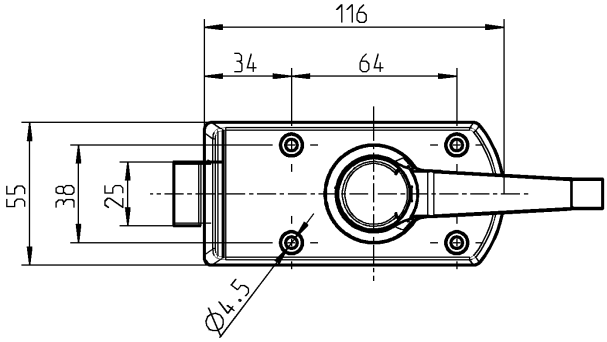

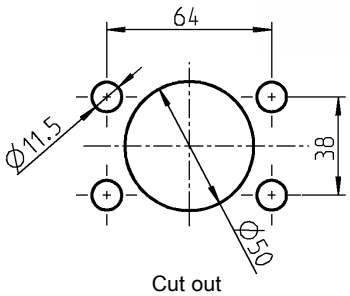

Cut out

- available in various colours
- Locking block ordered separately
- RH and LH applicable

Interior lock polyamide black; handle material of your choice; cam and plate POM; pivot stainless; with gasket and spring			
	A	**LH**	**RH**
Door thickness = 24 - 29; handle polyamide black	3,5	5131-U659-AA	5131-U649-AA

Further parts see page

– Exterior handle 1.1-160
– Handle plate 1.1-170
– Bottom plate 1.1-170

© EMKA Beschlagteile GmbH & Co. KG • 2018 • www.emka.com

Exterior handle

PROGRAM 9301, 5131

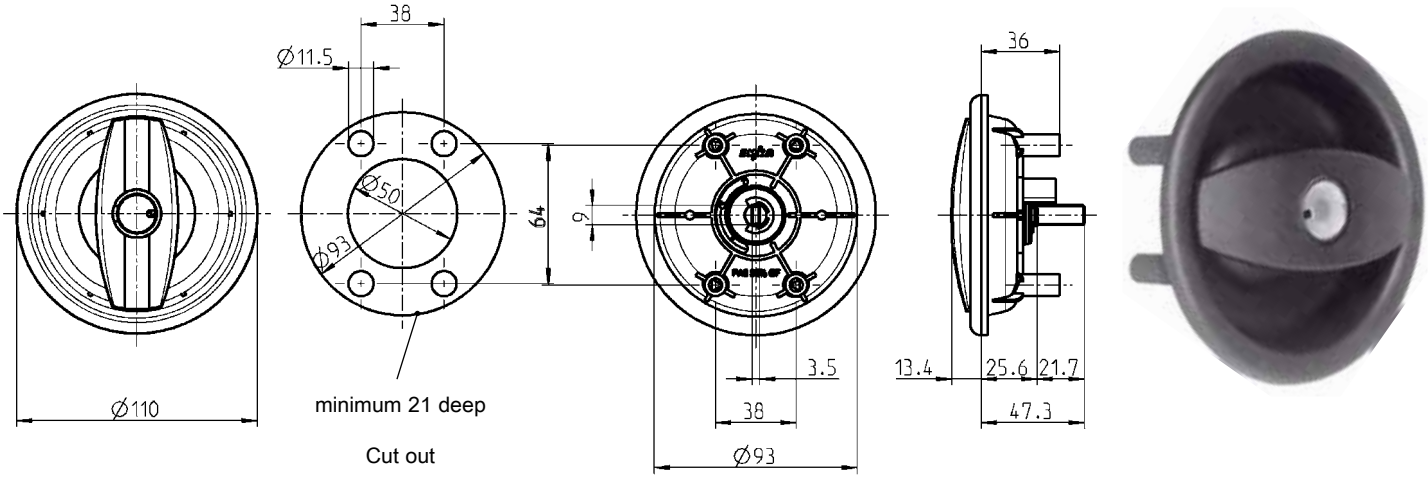

Exterior handle polyamide GF black; bush zinc die zinc plated; tappet zinc die chromated; with seal and spring	
RH	9301-U500-AA
LH	9301-U501-AA
Clip-in cylinder 3 zinc die chromated with stainless steel cap; with 2 keys	
keyed 8888	9850-U100
Keyed different	9850-U101

Further parts see page
– Interior lock 1.1-150

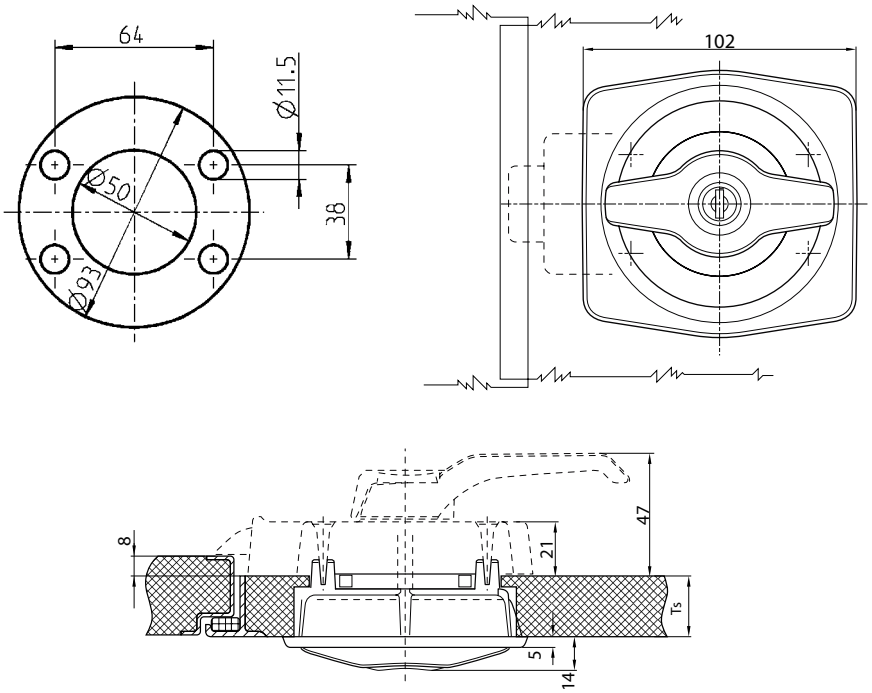

- lockable with GX- closings
- consisting of interior lock and exterior handle
- Ts = door thicknesses

Exterior handle polyamide GF black; pivot stainless steel; plate cylinder zinc die chrome plated with two keys; plate and screws m.s. zinc plated; with spring		
	LH	**RH**
Door thickness = 24 - 29	5131-U606-AA	5131-U638-AA
Door thickness = 32 - 36	on request	5131-U644-AA
Door thickness = 36 - 40	on request	5131-U758-AA

Further parts see page
– Interior lock 1.1-150

© EMKA Beschlagteile GmbH & Co. KG • 2018 • www.emka.com

Handle plate; spacer plate

PROGRAM 5131

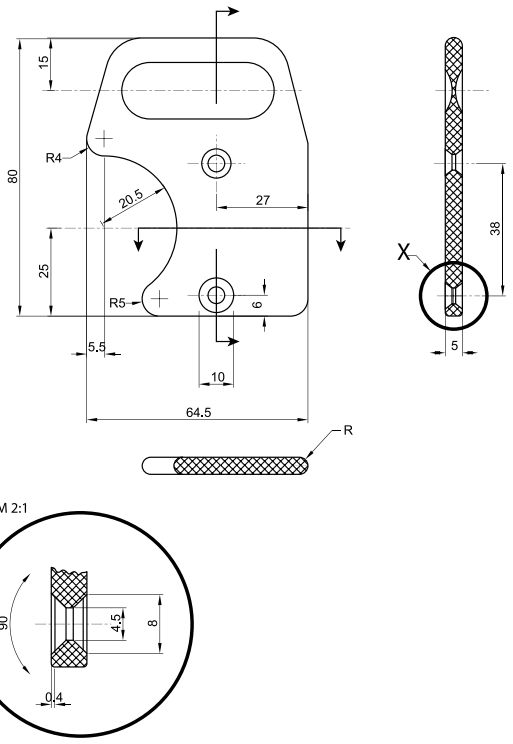

- for interior locks
- Hole spacing 38 mm

On request:
– further colours

Handle plate polyamide black	
	5131-4064-AA

Further parts see page
– Interior lock 1.1-150

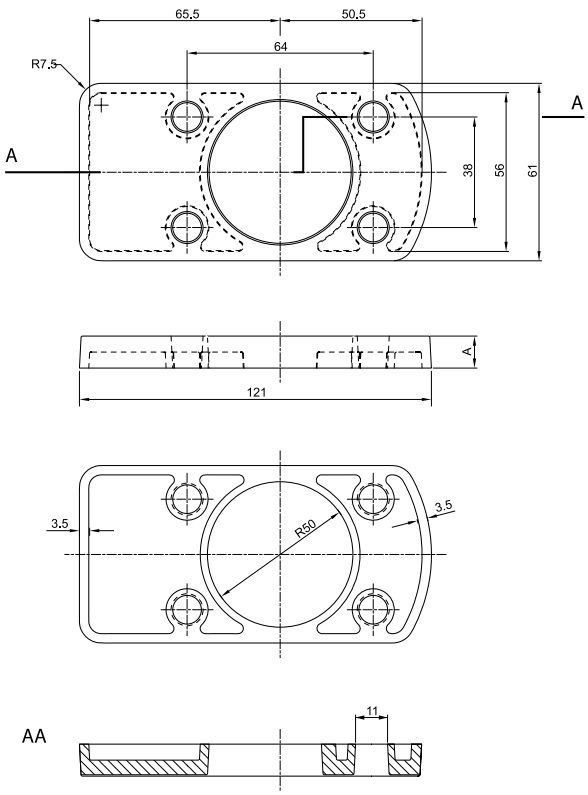

On request:
– further colours

Spacer plate polystyrene black	
A = 2 mm	5131-4000-AA
A = 4 mm	5131-4001-AA

Further parts see page
– Interior lock 1.1-150

© EMKA Beschlagteile GmbH & Co. KG • 2018 • www.emka.com

Flap lock
PROGRAM 9802

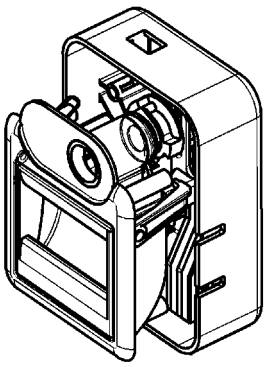

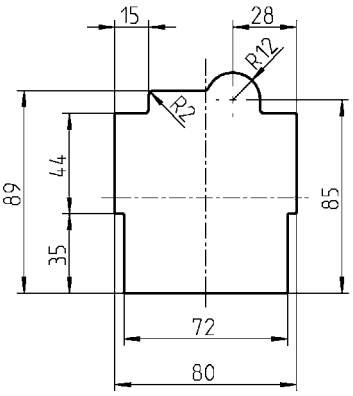

Cut out

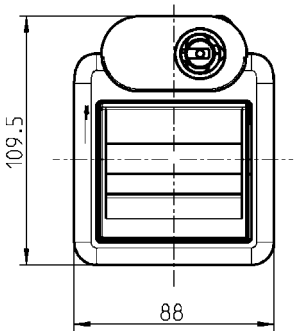

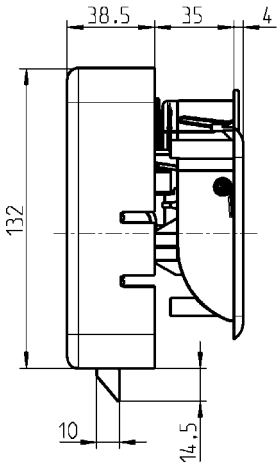

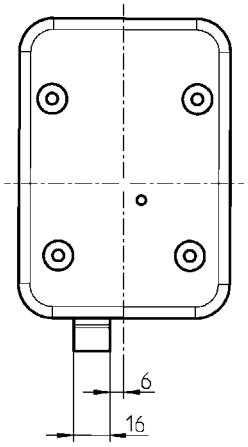

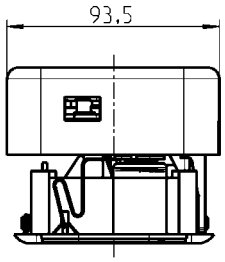

Technology
- redesigned locking system with bolt locks
- Interior lock freely positionable
- Breakup assurance by exterior handle with freewheel clutch
- Exterior handle prepared for clip-in cylinder
- Emergency opening from interior

Handling
- ergonomically designed actuators
- special smooth-running operation
- low closing force, hence very quiet

Versions
- colours as per request
- multi-point locking = increased security
- available as 1-, 2- and 3-point locking mechanism

On request:
– with central locking and interior unlocking slide

Flap lock polyamide black; cam POM black; plug cylinder chrome plated; catch, pin and bush die cast zinc; screws washers and pins m.s. zinc plated; with spring	
	9802-U810-AA
Clip-in cylinder 3 zinc die chromated with stainless steel cap; with 2 keys	
keyed 8888	9850-U100
Keyed different	9850-U101

© EMKA Beschlagteile GmbH & Co. KG • 2018 • www.emka.com

Swinghandle with compression

PROGRAM 1150

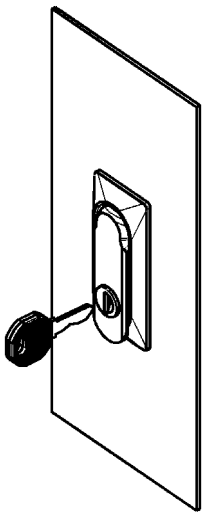

As the handle is pushed into the escutcheon (see fig 2)
the cam moves 3 mm axially towards the door.

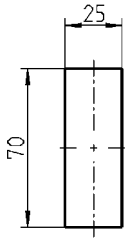

Cut out

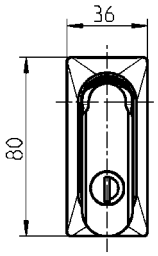

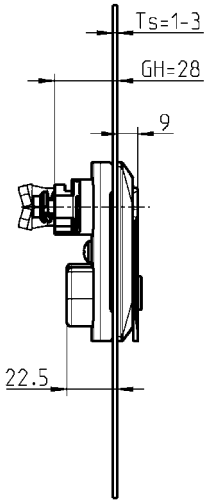

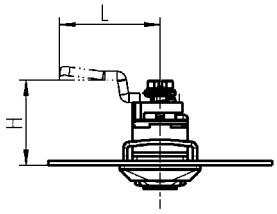

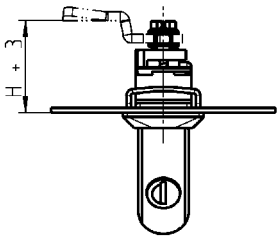

Swinghandle polyamide GF black powder coated, round cylinder with stainless steel cap and shutter, fixing material m.s. zinc plated, shaft zinc die zinc plated, push button polyamide silver. Each round cylinder has one silver steel key with polyamide grip GF black.		
	without seal (IP 40)	**with seal (IP 65)**
Push button	1152-U9	1152-U9-01
keyed EK 333	1152-U10	1152-U10-01
Keyed different	1152-U12	1152-U12-01
Blank	1152-U11	1152-U11-01

Turn 90°

Note
Suitable for door thicknesses from 1 - 3 mm.

Further types on request
– Company logos may be printed or embossed
– This handle has an ‘over-center’ action and so is vibration resistant

© EMKA Beschlagteile GmbH & Co. KG • 2018 • www.emka.com

Compression latch ‘Double Red’ with or without visual opening indicators for storage cases

PROGRAM 1000

Product description:

The compression latch has two optical opening indicators. These consist of the indicator of the clip-in cylinder and the second indicator for the position of the handle. In case the opening indicator on the sleev and the clip-in cylinder is visible, the compression latch is unlocked. The same is true for the opening indicator between handle and housing.
In case the opening indicator is visible, the compression latch is compressed.

Basic

The Basic versions are the new, cost-optimized variants of the compression latch, which do without the optic opening indicators.
In addition to the basic variant in ECO black, a UV-stabilized variant in white is also available.

‘Double Red’
with visual opening indicators

Basic
ECO black

Basic white
(UV-stabilised)

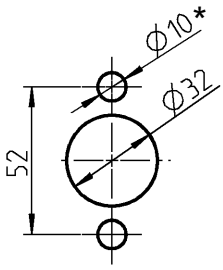

Cut out

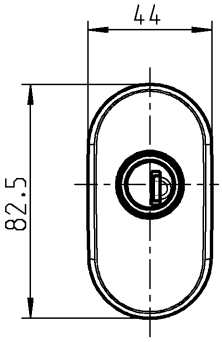

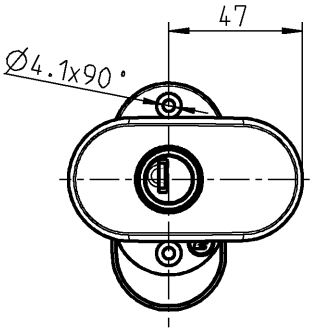

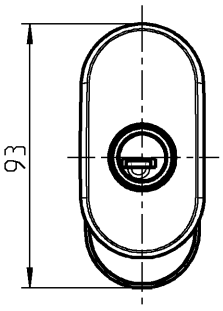

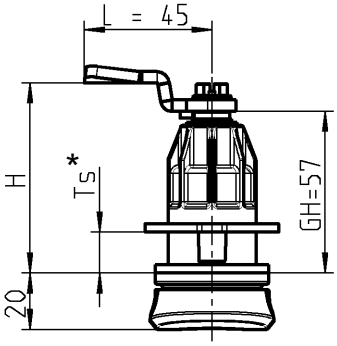

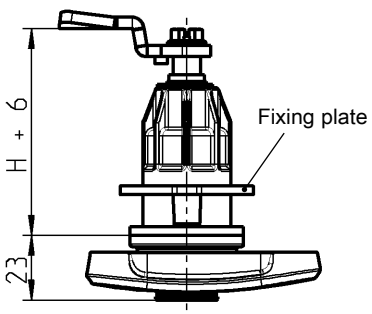

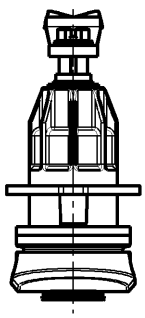

* Attention:
When the fixing plate is turned over, the cut out holes are decreased from Ø10 auf Ø4.1.
The Maximum value of the Ts dimension is decreased by -10 mm.

© EMKA Beschlagteile GmbH & Co. KG • 2018 • www.emka.com

Tamper and vibration proof

The compression latch is vibration-proof according to DIN EN 61373.
Depending on the installation location and operational conditions, specific checks are necessary and/or supplementary measures of fastening required.

Compression latch version by choice for clip-in cylinder; handle PA6 colour by choice; housing PA6 GF colour by choice; bush for clip-in cylinder zinc-die zinc-coated; adapter, cog and locking shaft zinc-die; fixing plate POM black; screw, circlip and pin m.s. zinc coated; with spring and seal; key can be removed in both positions			
Clip-in cylinder	'Double Red' witch visual opening indicators	Basic ECO black	Basic white (UV-stabilised)
System 1	on request	on request	on request
System 2	1000-U866-02	on request	on request
System 3	1000-U866-03	1000-SU853	1000-SU853-01
Clip-in cylinder 3 zinc die chromated with stainless steel cap; with 2 keys			
keyed 8888			9850-U100
Keyed different			9850-U101

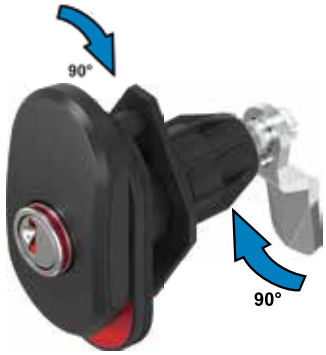

Open
By a rotation of the handle of 90°, the cam rotates.

Closed
By further rotation of the handle of 90° the cam moves 6 mm in axial direction.

Compressed

Open:
Reversed motion

Please order separately: Cam m.s. zinc plated Cams with other H and L dimensions on request. Minimum quantity 2000 pieces		
H	Ts	GH = 57 mm
43	17 - 38	1000-112
45	17 - 40	1000-22
47	17 - 42	1000-113
49	17 - 44	1000-21
52	17 - 47	1000-20
53	17 - 48	1000-19
55	17 - 50	1000-18
57	17 - 50	1000-17
59	17 - 50	1000-16
61	17 - 50	1000-15
63	17 - 50	1000-14
64	17 - 50	1000-27
65	17 - 50	1000-50
67	17 - 50	1000-13
69	17 - 50	1000-28
71	17 - 50	1000-26
73	17 - 50	1000-12
74	17 - 50	1000-11
75	17 - 50	1000-51
77	17 - 50	1000-52
79	17 - 50	1000-25
81	17 - 50	1000-53
83	17 - 50	1000-54
84	17 - 50	1000-10
86	17 - 50	1000-55
89	17 - 50	1000-56

© EMKA Beschlagteile GmbH & Co. KG • 2018 • www.emka.com

Compression latch swinghandle for storage box

PROGRAM 1342

Tamper and vibration proof

The compression latch swinghandle is of vibration-proof design.
Depending on the installation location and the operational conditions, specific tests and/or supplementary measures of fastening are necessary.

for Ts = 15 - 30 mm ; GH = 38 mm

for Ts = 30 - 45 mm ; GH = 53 mm

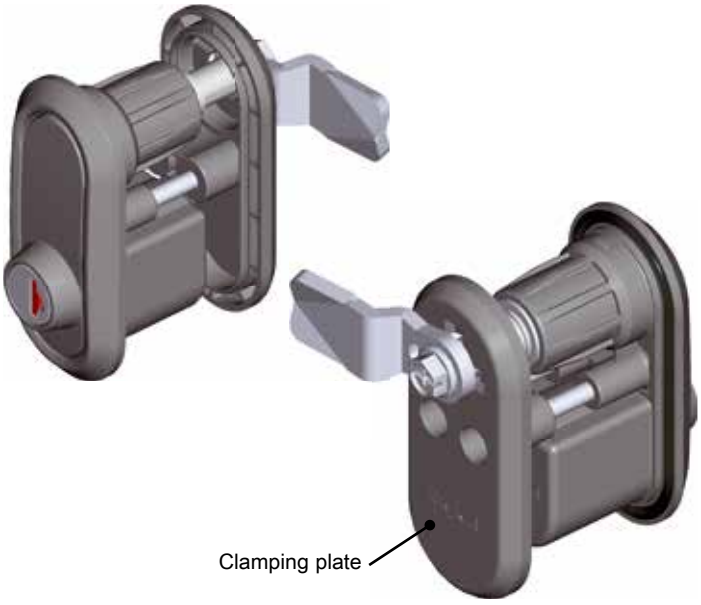

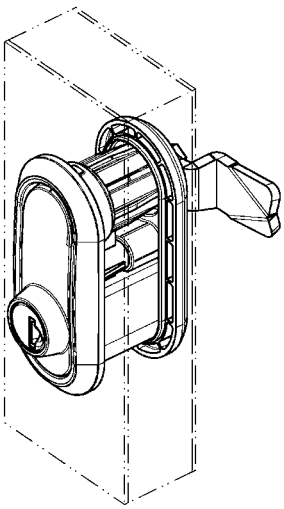

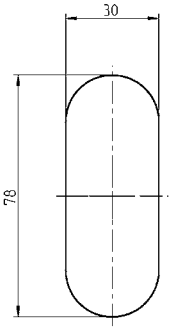

Cut out

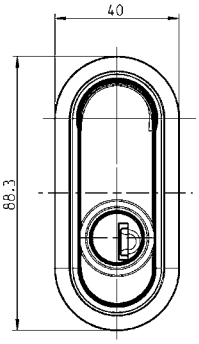

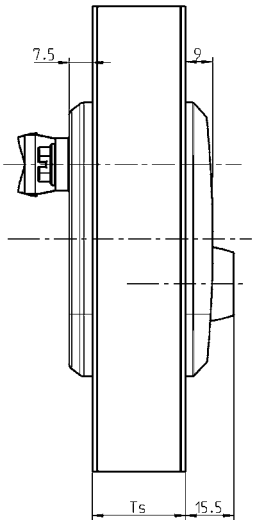

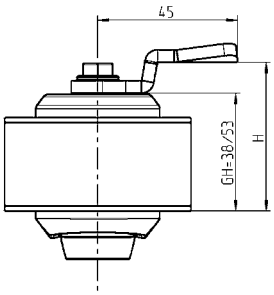

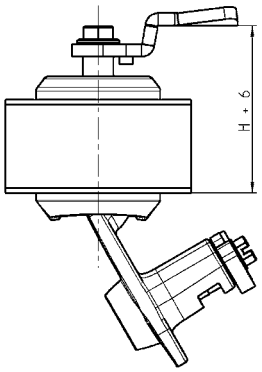

© EMKA Beschlagteile GmbH & Co. KG • 2018 • www.emka.com

Compression latch swinghandle polyamide GF black for clip-in cylinder, clip-in cylinder adapter, screw m.s. zinc plated, with spring and seal. Key removable in both positions			
Clip-in cylinder	**GH = 38 mm**	Clip-in cylinder	**GH = 53 mm**
System 1	1342-U1-01	System 1	1342-U2-01
System 2	1342-U1-02	System 2	1342-U2-02
System 3	1342-U1-03	System 3	1342-U2-03
Clip-in cylinder 3 zinc die chromated with stainless steel cap; with 2 keys			
keyed 8888			9850-U100
Keyed different			9850-U101
Please order separately: Clamping plate polyamide GF black, fixing material m.s. zinc plated			
Ts = 15 - 21	1342-U3	Ts = 30 - 36	1342-U5
Ts = 21 - 30	1342-U4	Ts = 36 - 45	1342-U6

Please order separately:
Cam m.s. zinc plated

H	**GH = 38 mm**	H	**GH = 53 mm**
38	1000-17	38	-
40	1000-16	40	-
42	1000-15	42	-
44	1000-14	44	-
45	1000-27	45	-
46	1000-50	46	-
48	1000-13	48	-
50	1000-28	50	-
52	1000-26	52	-
53	-	53	1000-17
54	1000-12	54	-
55	1000-11	55	1000-16
56	1000-51	56	-
57	-	57	1000-15
58	1000-52	58	-
59	-	59	1000-14
60	1000-25	60	1000-27
61	-	61	1000-50
62	1000-53	62	-
63	-	63	1000-13
64	1000-54	64	-
65	1000-10	65	1000-28
67	1000-55	67	1000-26
69	-	69	1000-12
70	1000-56	70	1000-11
71	-	71	1000-51
73	-	73	1000-52
75	-	75	1000-25
77	-	77	1000-53
79	-	79	1000-54
80	-	80	1000-10
82	-	82	1000-55
85	-	85	1000-56

Open
By a rotation of the handle of 90°, the cam rotates.

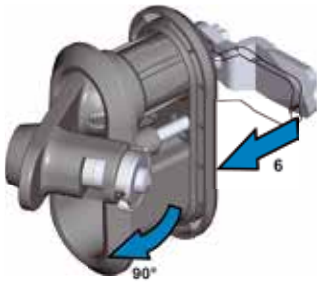

Closed
By further rotation of the handle of 90° the cam moves 6 mm in axial direction.

Compressed

Open:
Reversed motion

© EMKA Beschlagteile GmbH & Co. KG • 2018 • www.emka.com

Quarter turn designed for clip-in cylinders

PROGRAM 1000

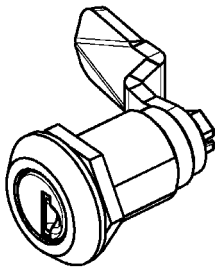

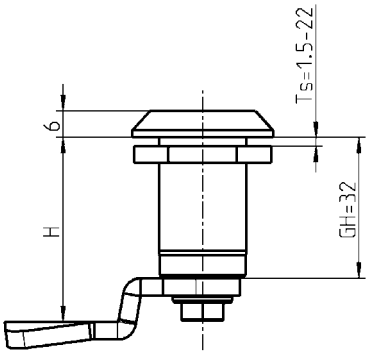

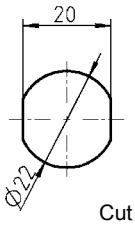

Cut out

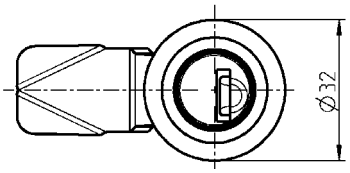

As a supplementary measure for vibration proof fastening the serrated washer 1000-103 can be used.

Quarter turn for clip-in cylinder; housing zinc die surface of your choice; adapter zinc die raw; nut and screw m.s. zinc plated		
	black powder-coated	**chrome pl.**
clip-in cylinder system 1	on request	on request
clip-in cylinder system 2	on request	on request
clip-in cylinder system 3	1000-U875-03	on request
serrated lock washer m.s. zinc plated		
		1000-103

Attention:
The H-dimension will be reduced by 2 mm when this dust cap is installed.

Further parts see page
– Cam without catch 1.2-400

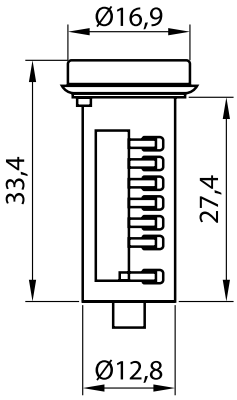

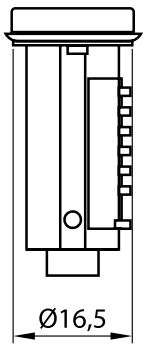

Clip-in cylinder 3 zinc die chromated with stainless steel cap; with 2 keys	
keyed 8888	9850-U100
keyed different	9850-U101

Further parts see page
– Rotary bolt lock 1.2-280
– Locking pin 1.2-280

© EMKA Beschlagteile GmbH & Co. KG • 2018 • www.emka.com

Compression latch with optical opening indicator

PROGRAM 1500

Tamper and vibration proof

The compression latch is designed to be vibration-proof as such. Depending on the installation location and the operational conditions, specific tests and/or supplementary measures of fastening are necessary.

Product benefits

- Visual opening indicator clearly visible due to 90° open flap when uncompressed
- The flap closes automatically when compressed
- Integrated dust cap
- The flat seal cushions the flap and prevents damages to the door
- Standard cut out program 1500
- Patented

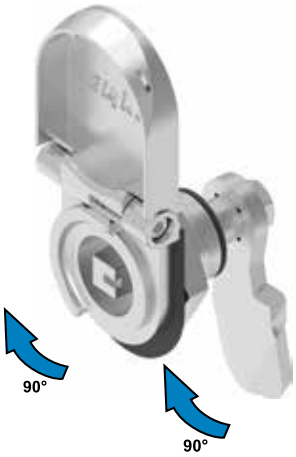

Open
By rotation of the operation of 90° the cam rotates.

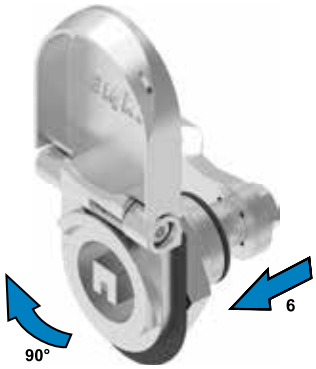

Closed
By further rotation of the operation of 90° the cam moves 6 mm in axial direction.

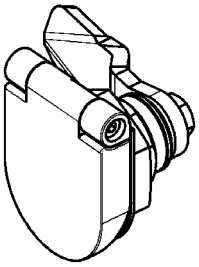

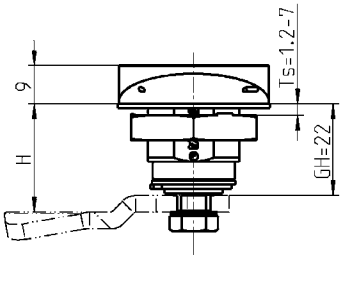

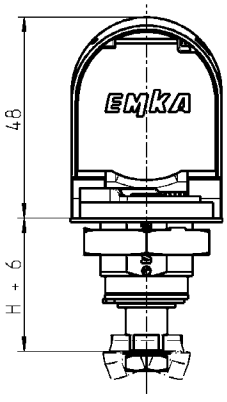

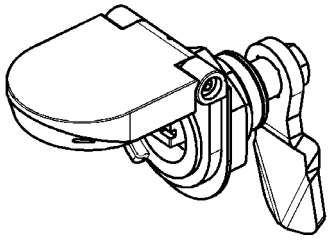

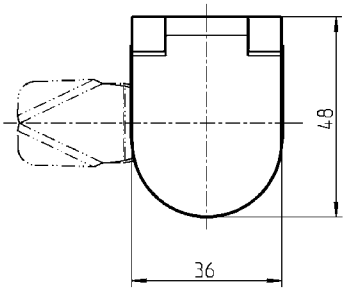

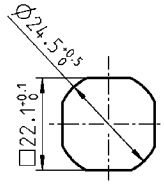

Cut out

Compressed

Open:
Reversed motion

Compression latch with visual opening indicator AISI 316; nut and earth nut AISI 316; screw and lock washer stainless steel; with spring and seal	
Square 8 with indicator	1500-U776-LIPH

Further parts see page

– Cam without catch 1.2-400
– Key 1.2-420

© EMKA Beschlagteile GmbH & Co. KG • 2018 • www.emka.com

Quarter turn; Housing GH = 18 and 30 - 60; Insert; Seal

PROGRAM 1000

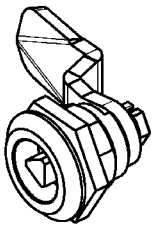

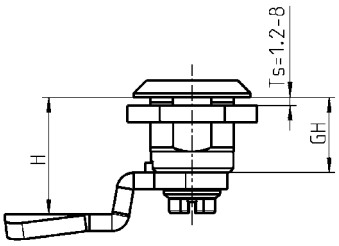

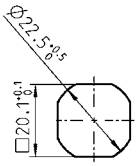

Cut out

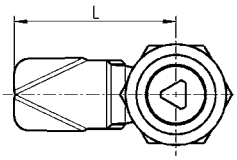

Housing material on choice; nut or earthnut m.s. zinc plated or nut stainless steel

Head diameter / GH = 18 mm / Head height	Ø28		Ø30		Ø32		□28	
	4		4		6		4	
	Nut	Earth nut	Nut	Earth nut	Nut	Earth nut	Nut	Earth nut
Zinc die chrome plated	1000-U45	1000-U56	1000-U47	1000-U55	1000-U7	1000-U54	1000-U330	1000-U332
Zinc die chrome plated (with foamed seal)	1000-U45-G	1000-U56-G	1000-U47-G	1000-U55-G	1000-U7-G	1000-U54-G	–	–
Zinc die black powder-coated	1000-U223	1000-U224	1000-U221	1000-U222	1000-U219	1000-U220	1000-U331	1000-U333
Zinc die black powder-coated (with foamed seal)	1000-U223-G	1000-U224-G	1000-U221-G	1000-U222-G	1000-U219-G	1000-U220-G	–	–
Polyamide GF V0 black	1000-U155	–	–	–	1000-U46	–	–	–
Polyamide GF V0 black (with foamed seal)	1000-U155-G	–	–	–	on request	–	–	–
Stainless steel AISI 303 (with foamed seal)	1000-U134	–	–	–	–	–	–	–
Stainless steel AISI 316 (with foamed seal)	1000-U530	–	–	–	–	–	–	–

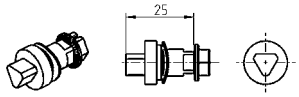

Insert

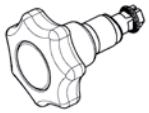

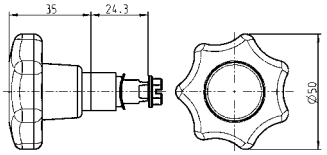

Star handle

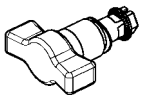

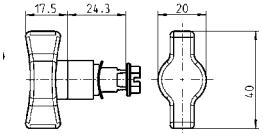

Wing knob

Insert zinc die, polyamide or stainless steel; Fixing material m.s. zinc plated or stainless steel; with seal (only for stainless steel version)	Zinc die chrome plated	Zinc die black powder-coated	Polyamide 66 GF 50 black	Stainless steel AISI 303	Stainl.steel AISI 316
Square 6	1000-U17	1000-U322	–	1000-U351	–
Square 7	1000-U1	1000-U323	1000-U184-N	1000-U135	1000-U531
Square 8	1000-U2	1000-U324	1000-U185-N	1000-U136	1000-U532
Square 8 slotted	1000-U18	–	–	1000-U352	–
Triangular 6.5 CNOMO	1000-U197	–	–	–	–
Triangular 7	1000-U3	1000-U325	–	1000-U334	1000-U536
Triangular 8	1000-U4	1000-U326	1000-U186-N	1000-U335	1000-U537
Triangular 9	1000-U194	–	–	–	–
Triangular 10	1000-U249	–	–	–	–
Double bit 3	1000-U5	1000-U327	1000-U187-N	1000-U183	1000-U533
Double bit 5	1000-U6	1000-U328	1000-U188-N	1000-U137	1000-U534
Hexagon female 10mm	1000-U96	–	–	–	–
Square female 6mm	1000-U168	–	–	–	–
Square female 7mm	1000-U182	–	–	–	–
Square female 8	1000-U169	–	–	–	–
Daimler Benz	1000-U20	–	–	–	–
Slot 1.2 x 3	1000-U195	–	–	–	–
Slot 2x4	1000-U142	1000-U329	1000-U196-N	1000-U630	1000-U631
Slot 2 x 4 coinproof	1000-U738	1000-U739	–	–	–
Crown type	1000-U336	–	–	–	–
Eastern Europe Ø 13	1000-U509	–	–	1000-U729	–
Hexagon female 8 with pin	1000-U757	–	–	1000-U757-01	–
			Zinc die/ polyamide black	Polyamide GF black / AISI 303	
Star handle	–	–	1000-U13	1000-U138	–
Wing knob	–	–	1000-U78	1000-U510	–

© EMKA Beschlagteile GmbH & Co. KG • 2018 • www.emka.com

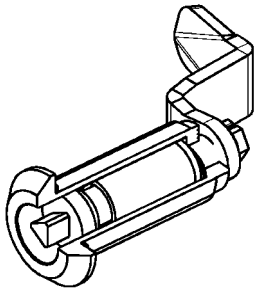

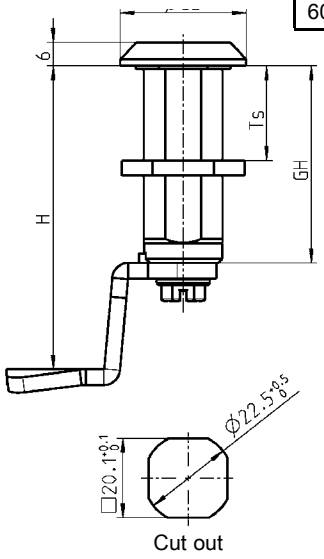

Cut out

GH	Ts
30 mm	1.5 up to 20 mm
36 mm	1.5 up to 26 mm
40 mm	1.5 up to 30 mm
50 mm	1.5 up to 40 mm
60 mm	1.5 up to 50 mm

Assembling instruction

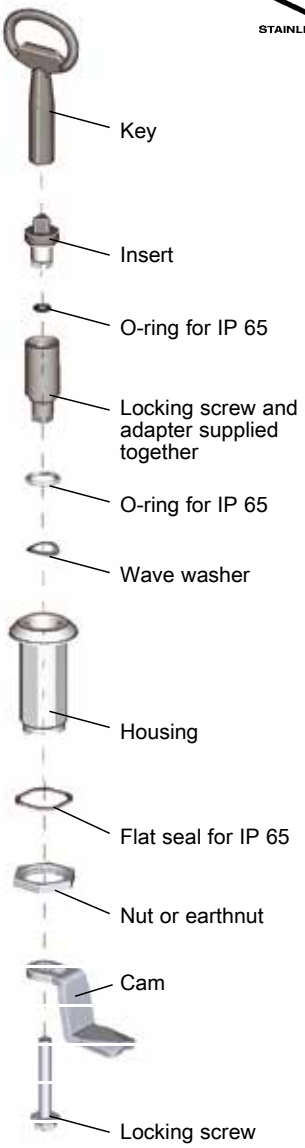

EDELSTAHL Rost frei STAINLESS STEEL

IP 65 achieved by:	
** Flat seal	1000-23
** O-ring	1000-24
IP 66 achieved by:	
Seal set	1000-U769
IP 69K achieved by:	
* Seal set	1000-U841
Assembly on request:	
without O-ring	1000-990
with O-ring	1000-991

Housing material on choice; nut or earthnut m.s. zinc plated or nut stainless steel
Adapter zinc die or AISI 303; screw m.s. zinc plated or stainless steel

GH in mm	Zinc die chrome plated		Zinc die black powder-coated		polyamide black	AISI 316
	Nut	Earthnut	Nut	Earthnut	Nut	Nut
30	1000-U51	1000-U65	1000-U225	1000-U226	1000-U876	1000-U878
– adapter			1000-U164			1000-U879
36	1000-U246	1000-U248	1000-U317	1000-U318	–	–
– adapter			1000-U198			–
40	1000-U66	1000-U67	1000-U227	1000-U228	1000-U737	–
– adapter			1000-U165			–
50	1000-U68	1000-U69	1000-U229	1000-U230	1000-U736	–
– adapter			1000-U166			–
60	1000-U504	1000-U505	1000-U506	1000-U507	–	–
– adapter			1000-U535			–

** included in case of stainless st. version

* Seal set only completely assembled with housing, insert and cam available

© EMKA Beschlagteile GmbH & Co. KG • 2018 • www.emka.com

Compression latch with handle

PROGRAM 1000

Example:
compression latch
with T-handle

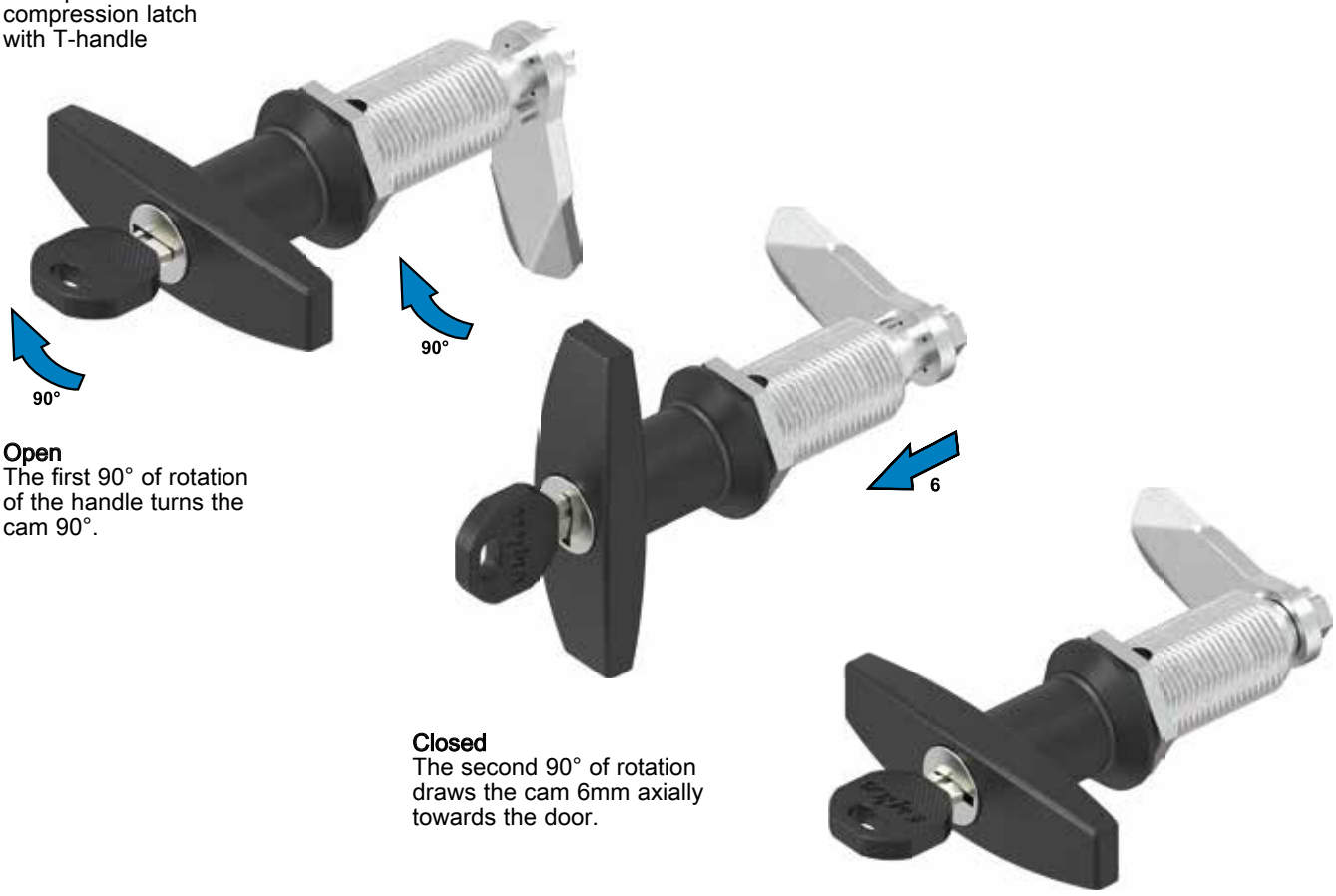

Open
The first 90° of rotation of the handle turns the cam 90°.

Closed
The second 90° of rotation draws the cam 6mm axially towards the door.

Compressed
key removable:

Open:
Reversed motion

Compression latch with T-handle

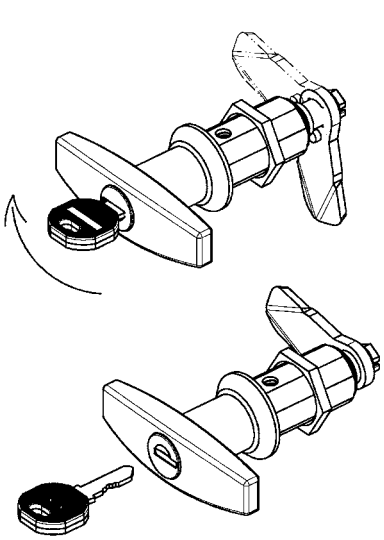

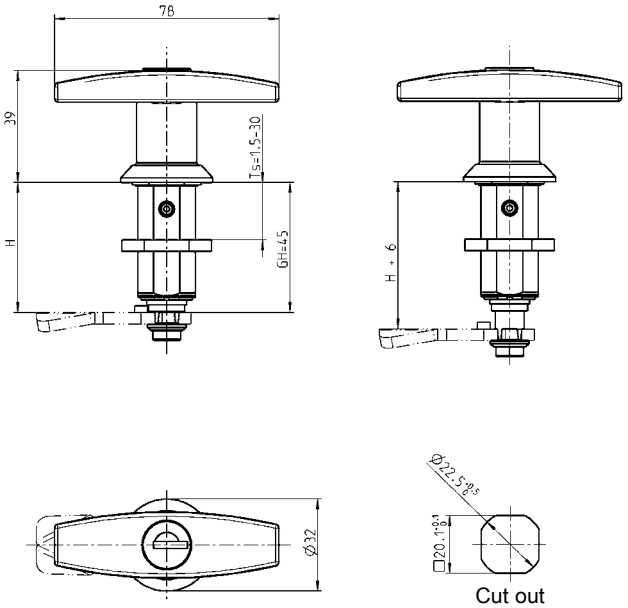

© EMKA Beschlagteile GmbH & Co. KG • 2018 • www.emka.com

Compression latch with wing knob

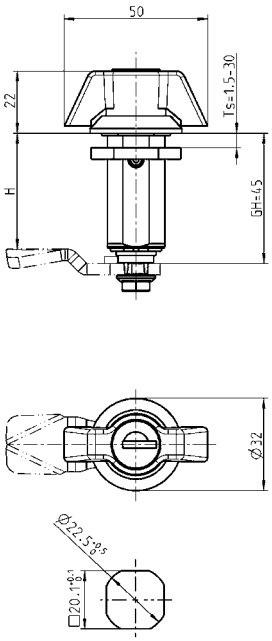

Cut out

Compression latch with L-handle

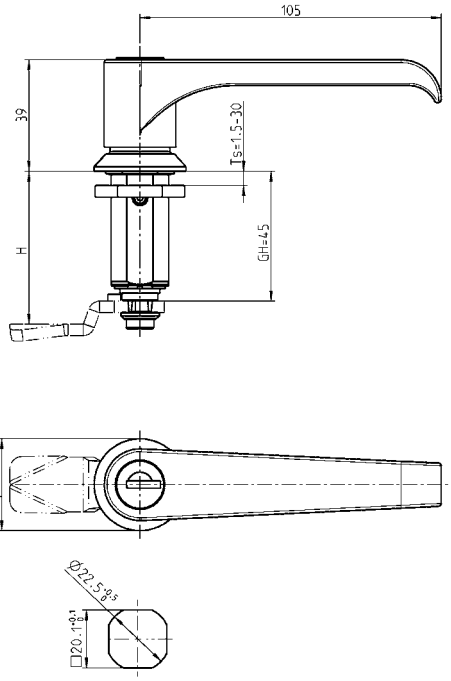

Cut out

Tamper and vibration proof

The compression latch is designed to be vibration-proof as such.
Depending on the installation location and the operational conditions, specific tests and/or supplementary measures of fastening are necessary.

Handle and housing zinc die, black powder coated, cylinder zinc die, with stainless steel cap and shutter, nut and screw zinc plated m.s. with spring and seal
Each cylinder has one silver steel key with polyamid grip.
Key removable in both positions.

	non locking	keyed EK 333	keyed different
Wing knob	1000-U826	1000-U827	1000-U828
T-Handle	1000-U820	1000-U821	1000-U822
L-handle	1000-U823	1000-U824	1000-U825

On request:
– Stainless steel version

Further parts see page
– Cam with catch 1.2-400

© EMKA Beschlagteile GmbH & Co. KG • 2018 • www.emka.com

Compression Handles with adjustable Cams

PROGRAM 1000

Example:
compression latch
with T-handle

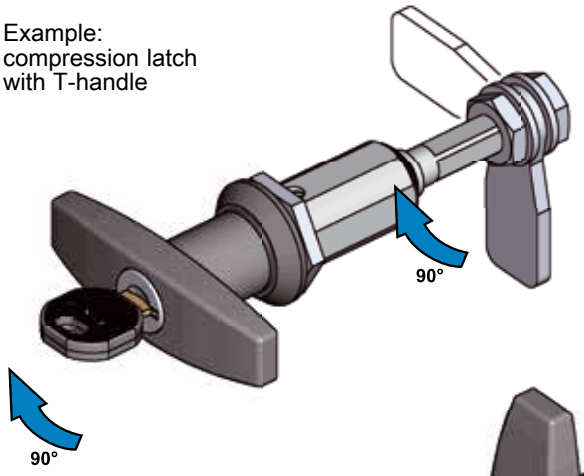

Open
The first 90° of rotation of the handle turns the cam 90°.

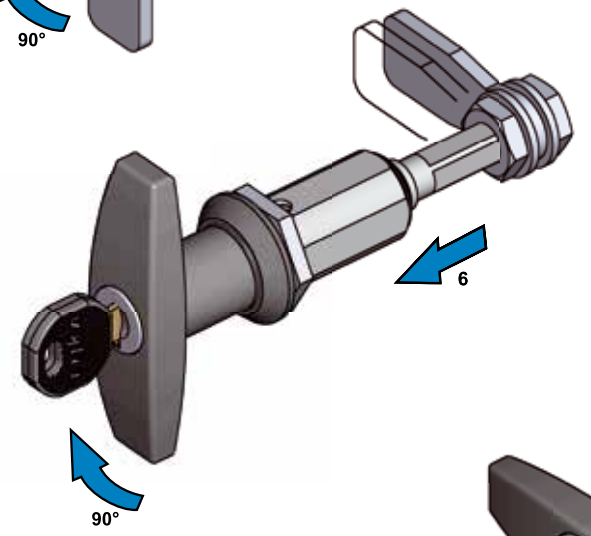

Closed
The second 90° of rotation draws the cam 6mm axially towards the door.

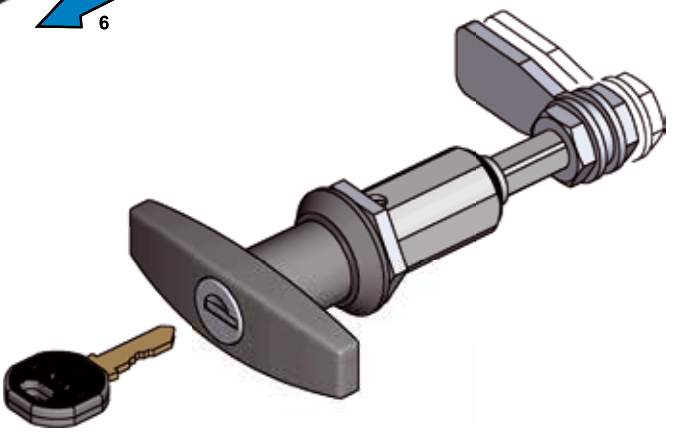

Compressed
key removable:

Open:
Reversed motion

Compression latch with T-handle

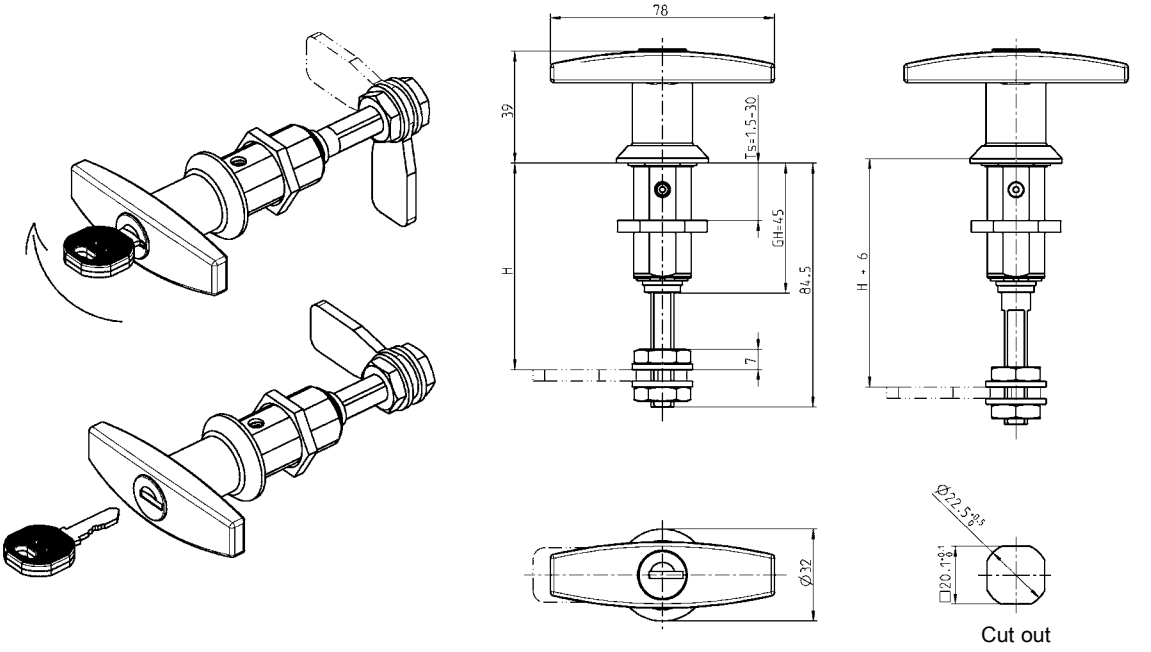

© EMKA Beschlagteile GmbH & Co. KG • 2018 • www.emka.com

Compression latch with wing knob

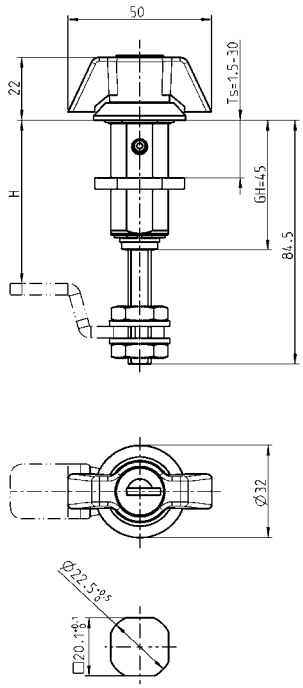

Cut out

Compression latch with L-handle

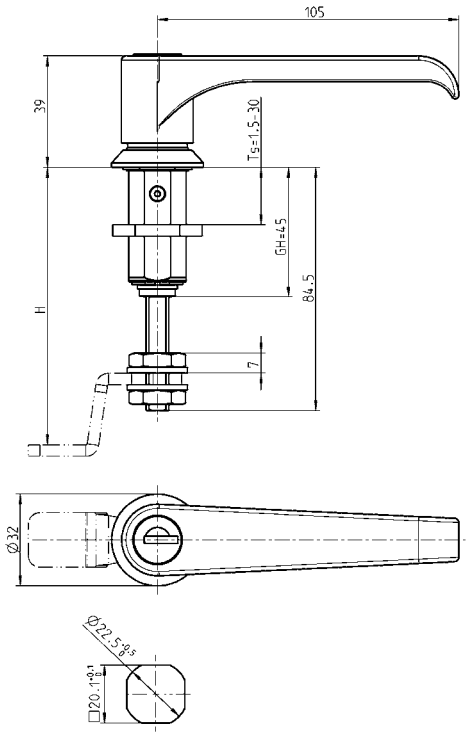

Cut out

Tamper and vibration proof

The compression latch is designed to be vibration-proof as such.
Depending on the installation location and the operational conditions, specific tests and/or supplementary measures of fastening are necessary.

Handle and housing zinc die black powder coated, cylinder zinc die with stainless steel cap and dust cover, nut and screw zinc plated with spring and seal
Each cylinder has one silver steel key with polyamid grip.
Key removable in both positions.

	non locking	keyed EK 333	keyed different
Wing knob	1000-U790	1000-U789	1000-U791
T-Handle	1000-U785	1000-U784	1000-U792
L-handle	1000-U788	1000-U787	1000-U793

On request:
– Stainless steel version

Further parts see page
– Cam with catch 1.2-400

© EMKA Beschlagteile GmbH & Co. KG • 2018 • www.emka.com

Handle clip fix

PROGRAM 1500

L-Handle clip fix

L-Handle with housing

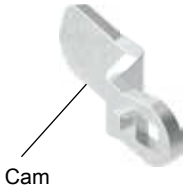

Cam

Locking clip

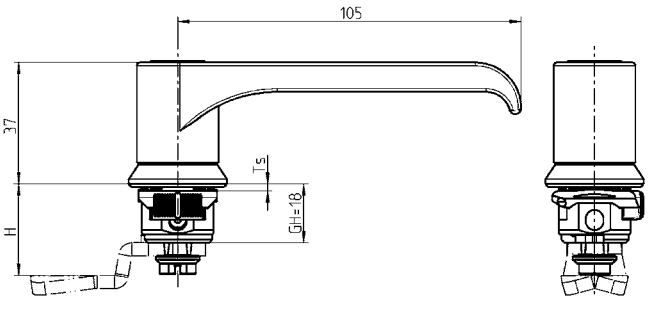

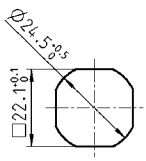

Cut out

T-handle quarter turn, clip fix

T-handle with housing

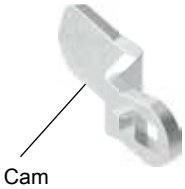

Cam

Locking clip

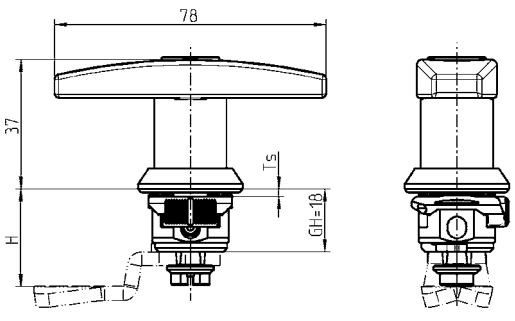

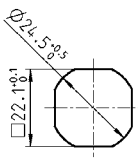

Cut out

© EMKA Beschlagteile GmbH & Co. KG • 2018 • www.emka.com

T-handle quarter turn, small, clip fix

T-handle small with housing

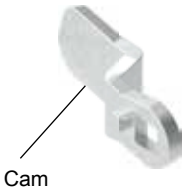

Cam

Locking clip

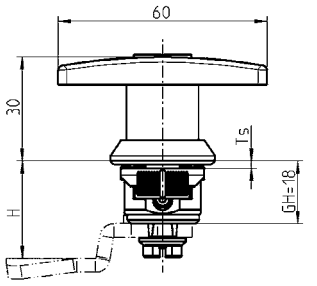

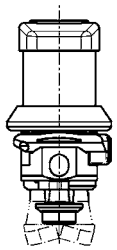

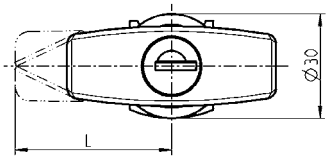

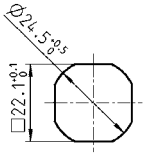

Cut out

Wing knob quarter turn clip fix

Wing knob handle with housing

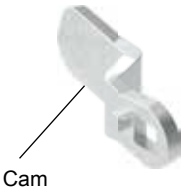

Cam

Locking clip

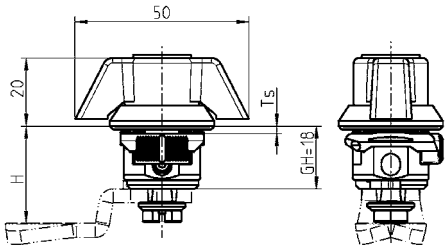

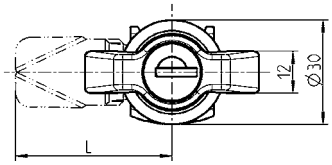

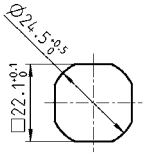

Cut out

Handle polyamide GF black / zinc die, housing polyamide GF black, round cylinder zinc die with stainless steel cap and dust cap, srew m.s. zinc plated, with seal. Each cylinder has one silver steel key with polyamid grip. Key removable in both positions.			
	non locking	**keyed EK 333**	**Keyed different**
Wing knob	1500-U343	1500-U345	1500-U347
T handle small	1500-U775 (IP 40)	1500-U773	1500-U774
T-Handle	1500-U546	1500-U548	1500-U550
L-handle	1500-U570	1500-U572	1500-U574
Locking clip polyamide GF, colour depending on item			
Ts = 1.0 - 1.5 colour pebble grey			1500-05-10
Ts = 1.5 - 2.0 colour black			1500-05-15

Further parts see page
– Cam (GH=18) 1.2-400

© EMKA Beschlagteile GmbH & Co. KG • 2018 • www.emka.com

Chest handle
PROGRAM 1130

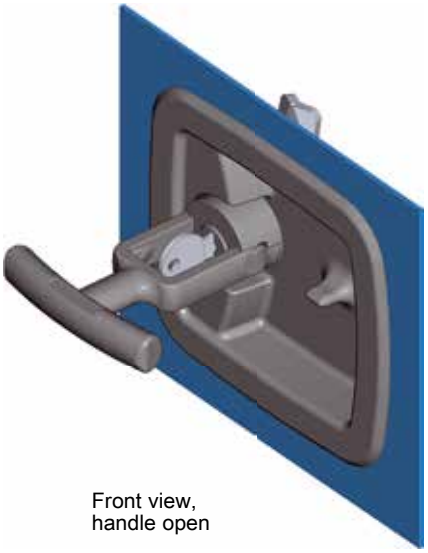

Front view,
handle open

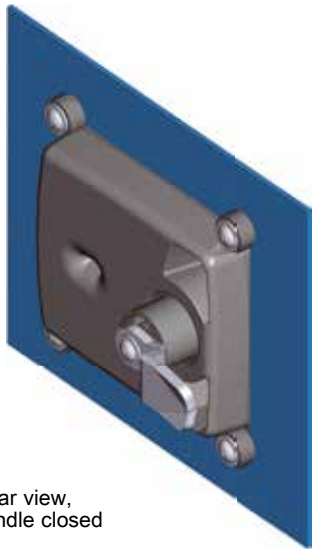

Rear view,
handle closed

Note

By pressing in the T-handle into the dish, a clamping effect is achieved.

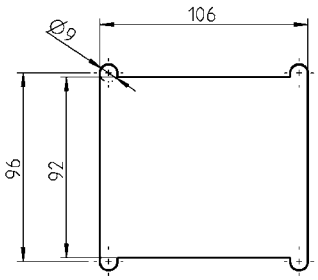

Cut out

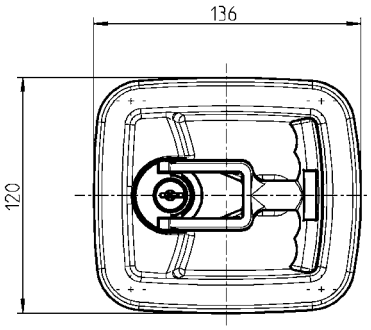

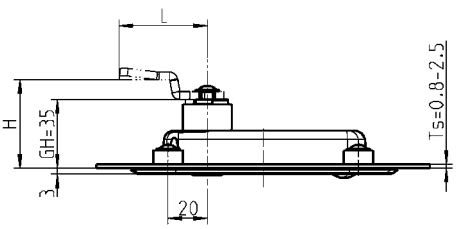

Recess T-handle polyamide GF black, fastening material m.s. zinc pl., with seal. Each round cylinder has one key m.s. nickel plated.	
keyed EK 333	1130-U3
keyed different	1130-U4

Further parts see page
– Cam with catch 1.2-400

© EMKA Beschlagteile GmbH & Co. KG • 2018 • www.emka.com

Recess T-handle with compression function and adjustable cam level

PROGRAM 1130

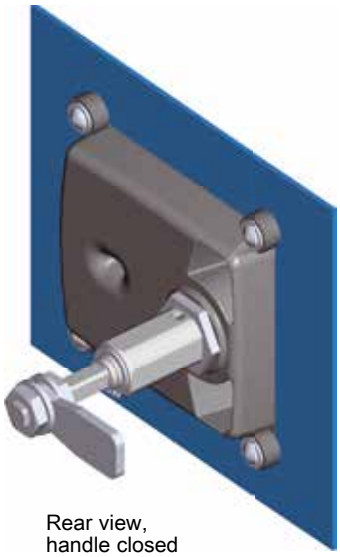

Rear view,
handle closed

Front view,
handle open

Note

By pressing in the T-handle into the dish, a clamping effect is achieved.

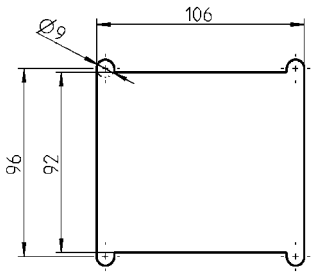

Cut out

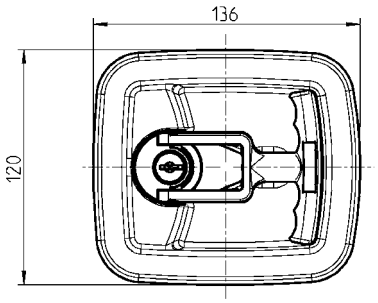

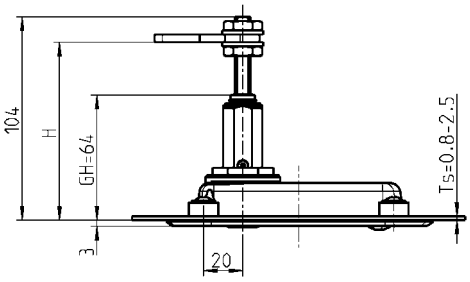

Hinged handle polyamide GF black, housing zinc die, fixing material m.s. zinc plated, with seal. Each round cylinder has one key m.s. nickel plated.	
keyed EK 333	1130-U10
Keyed different	1130-U11

Further parts see page
– Cam 1.2-410

© EMKA Beschlagteile GmbH & Co. KG • 2018 • www.emka.com

Chest handle

PROGRAM 1130

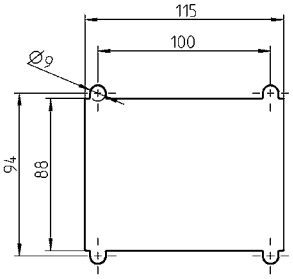

Cut out

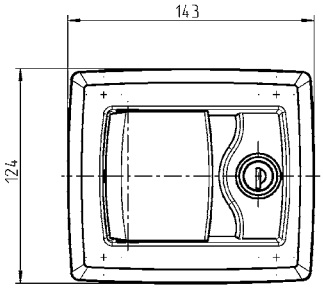

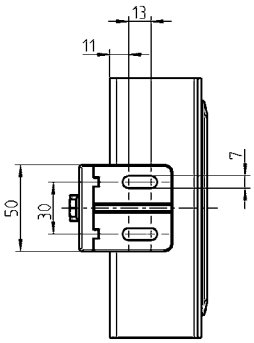

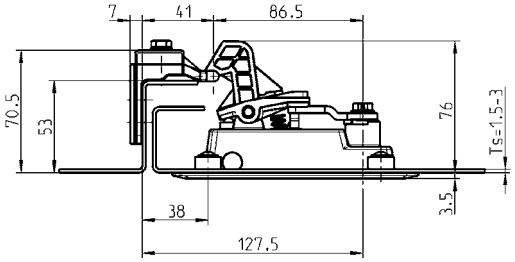

Note
The hinged handles 1130-U1 and -U2 are constructed for the version on the right-hand side

Version for LH use is created by removal of the round cylinder, rotating it of 180°, and refitting it.

Function:
The spring-loaded locking hook is equipped with a ‘door-slam’ effect.
Thereby door can also be closed when locked.

Hinged pattern handle polyamide GF black, compensator and lock catch zinc die zinc pl., round cylinder zinc die with stainless steel cap and dust cap, springs stainless steel, cam and fastening material m.s. zinc pl., with seal Each round cylinder has one silver steel key with polyamide grip GF black.	
keyed EK 333	1130-U1
Keyed different	1130-U2

© EMKA Beschlagteile GmbH & Co. KG • 2018 • www.emka.com

Chest handle
PROGRAM 1130

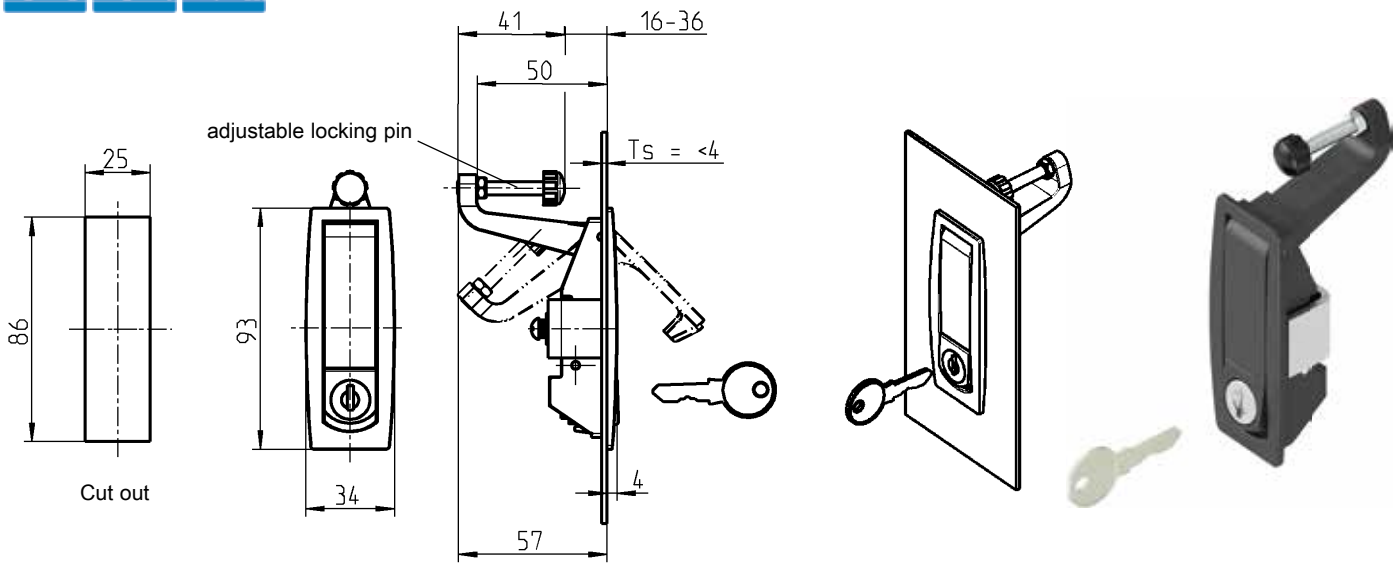

Compression flush handle zinc die black powder coated, locking pin m.s. zinc plated / TPE-V, fixing material m.s. zinc plated. Each round cylinder has one key m.s. nickel plated.	
keyed EK 333	1130-U8
Blank	1130-U9

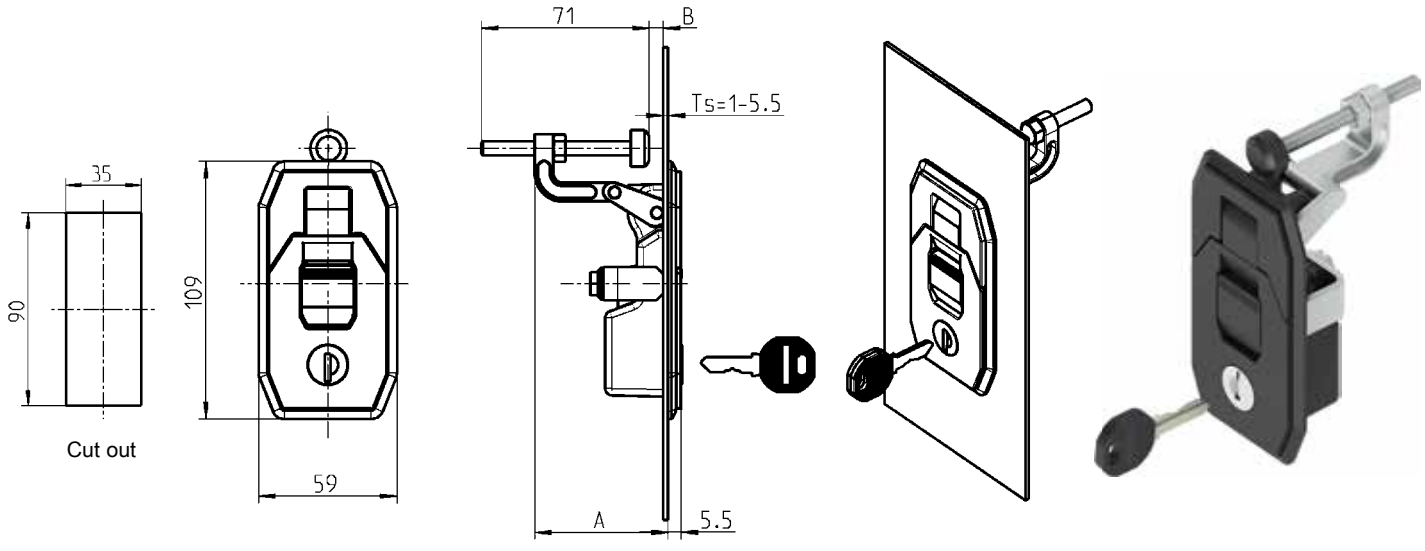

Hinged handle zinc die black powder coated, locking pin m.s. zinc plated / TPE-V, fixing material m.s. zinc plated, round cylinder with stainless steel cap and dust cap, with seal. One key from nickel silver with polyamide grip GF black per round cylinder	
A = 57 ; keyed EK 333	1130-U7
A = 57 ; keyed different	1130-U7-V
A = 71 ; keyed EK 333	1130-U7-01
A = 71 ; keyed different	1130-U7-01V

On request:
– Chest handle with different lever

© EMKA Beschlagteile GmbH & Co. KG • 2018 • www.emka.com

Interior release; Escutcheon

PROGRAM 5225

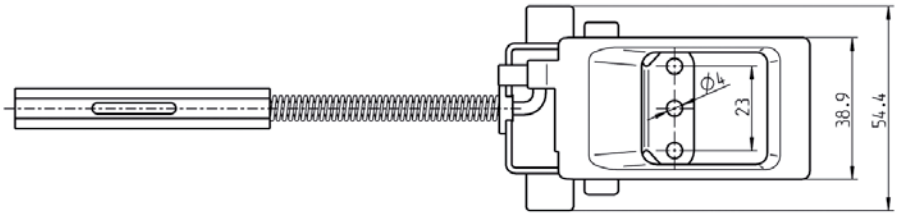

Inner release mechanism black ABS and galvanized steel retaining plate with spring	
	5225-U8

Further parts see page
– Escutcheon see below

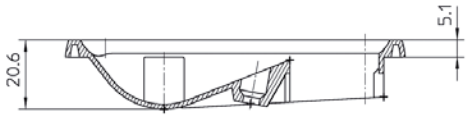

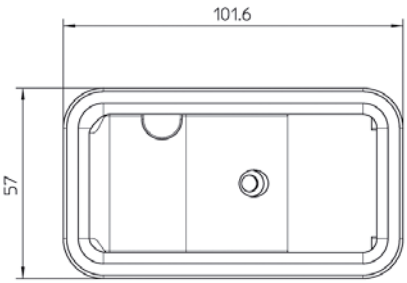

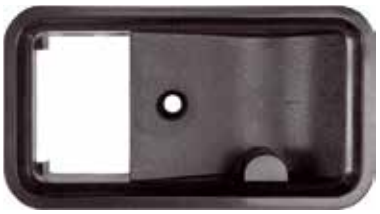

Escutcheon for interior release ABS black	
	5225-01-AA

Further parts see page
– Interior release see above

© EMKA Beschlagteile GmbH & Co. KG • 2018 • www.emka.com

Pushbutton lock; Clip-in cylinder

PROGRAM 5225, 9850

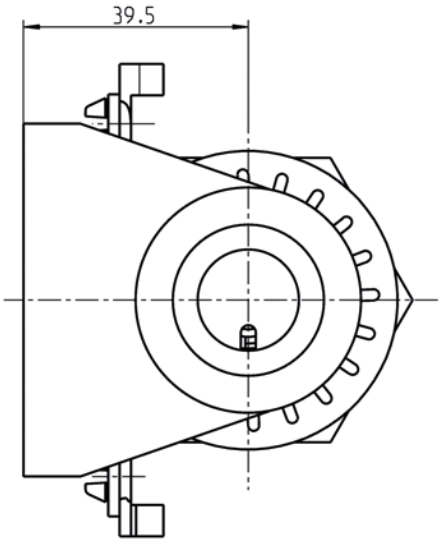

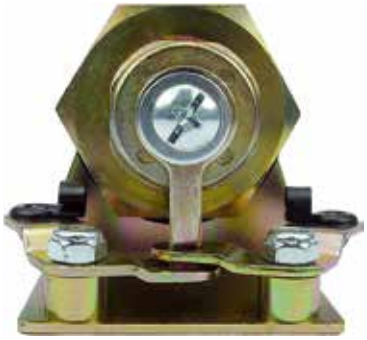

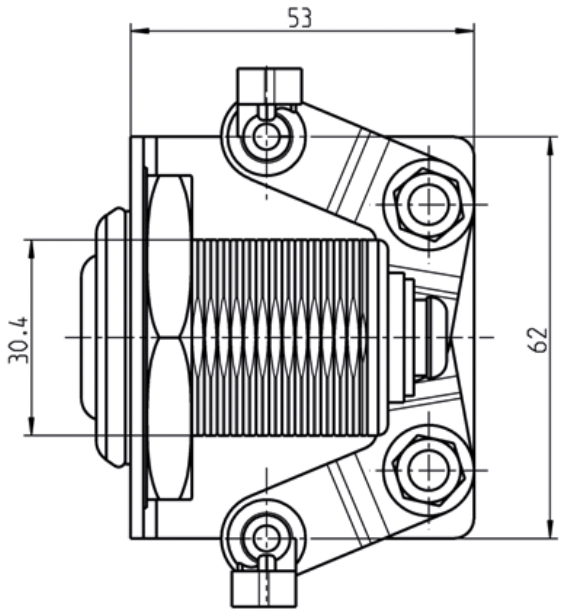

Push button locks for use with clip in cylinder, zinc plated with spring	
	5225-U200

© EMKA Beschlagteile GmbH & Co. KG • 2018 • www.emka.com

Spring bolt lock stainless steel

PROGRAM 5225

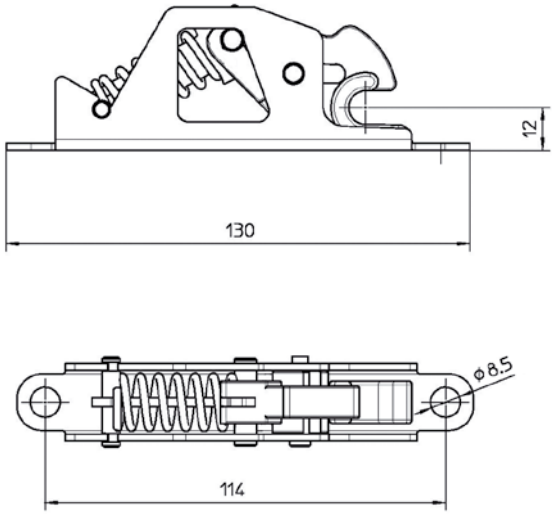

Opening force: 90N ± 12N
Locking force 70N ±10N

Spring bolt lock stainless steel	
	5225-U31

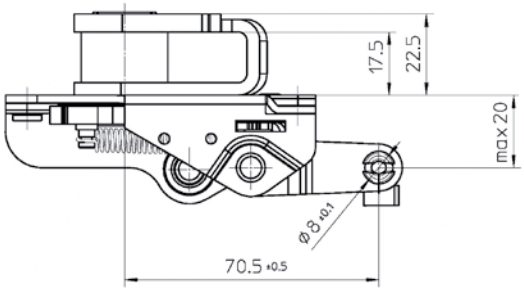

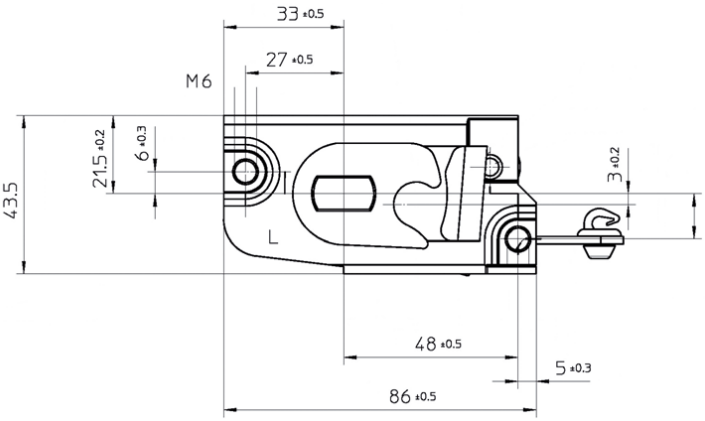

Rotary bolt lock m.s. zinc plated, with spring	
Right mirror image	5225-U9
left, as drawn	5225-U10
Rotary bolt lock m.s. zinc and nickel plated for 480h salt spray test; with spring	
Right mirror image	5225-U9-01
left, as drawn	5225-U10-01

Further parts see page
– Locking pin 1.2-280
– Pushbutton lock 1.2-260

© EMKA Beschlagteile GmbH & Co. KG • 2018 • www.emka.com

Rotary bolt lock with safety catch; Locking pin with plate

PROGRAM 5225

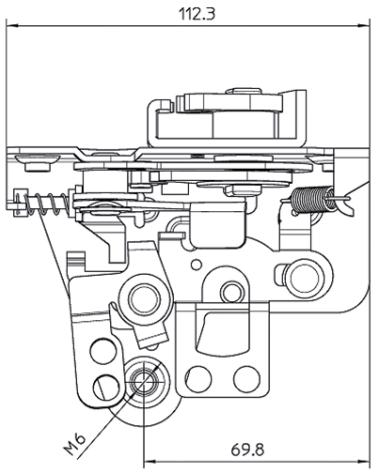

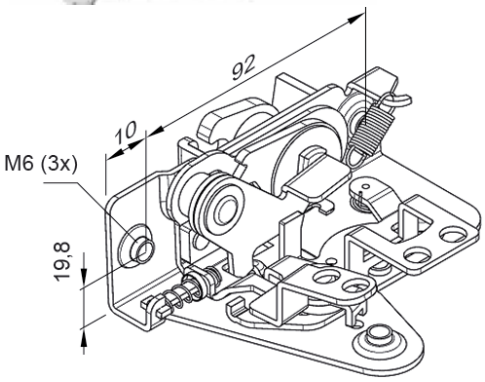

Lockable and unlockable from the inside

Rotary bolt lock with safety catch m.s. zinc plated and chromated; with spring	
Right mirror image	5225-U23
left, as drawn	5225-U24

Further parts see page

– Locking pin see below
– Pushbutton lock 1.2-260

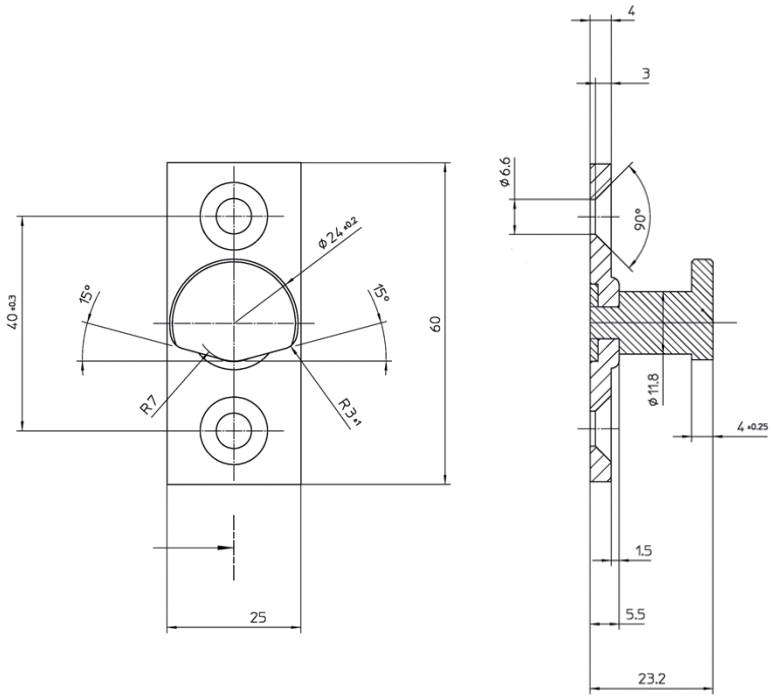

Locking pin Type 1 with zinc coated steel plate	
RH/LH	5225-U25
Locking pin Type 1 with zinc coated steel plate and 480h salt spray resistance	
RH/LH	5225-U25-01

Further parts see page

– Rotary bolt lock 1.2-270
– Pushbutton lock 1.2-260

© EMKA Beschlagteile GmbH & Co. KG • 2018 • www.emka.com

Cam with catch
Cam without catch
PROGRAM 1000

Cam with catch

Version 1
Cam

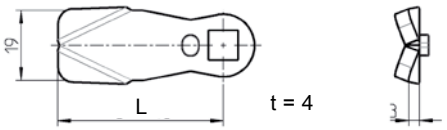

Version 2
Cam

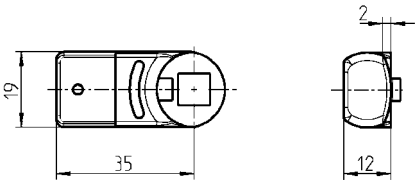

Version 3
Rod control for steel cam or stainless steel cam

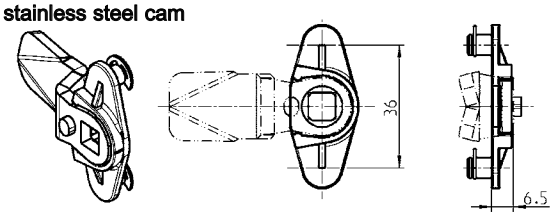

Rod control zinc die, zinc plated, circlip m.s. zinc plated	
	1000-U776
Rod control AISI 316, circlip stainless steel	
	1000-U776-PH

Cams witout catch on request.

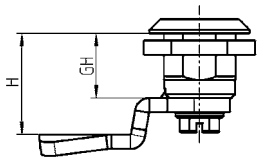

minus offset

straight version

plus offset

Cam with catch material as requested

H dimensions for GH =														
12	**18**	**22**	**28**	**30**	**31**	**32**	**36**	**39**	**40**	**42**	**43**	**45**	**50**	**60**
-	4	8	14	16	17	18	22	25	26	28	29	31	36	46
-	6	10	16	18	19	20	24	27	28	30	31	33	38	48
2	8	12	18	20	21	22	26	29	30	32	33	35	40	50
4	10	14	20	22	23	24	28	31	32	34	35	37	42	52
7	13	17	23	25	26	27	31	34	35	37	38	40	45	55
8	14	18	24	26	27	28	32	35	36	38	39	41	46	56
9	15	19	25	27	28	29	33	36	37	39	40	42	47	57
10	16	20	26	28	29	30	34	37	38	40	41	43	48	58
12	**18**	**22**	**28**	**30**	**31**	**32**	**36**	**39**	**40**	**42**	**43**	**45**	**50**	**60**
14	20	24	30	32	33	34	38	41	42	44	45	47	52	62
16	22	26	32	34	35	36	40	43	44	46	47	49	54	64
18	24	28	34	36	37	38	42	45	46	48	49	51	56	66
19	25	29	35	37	38	39	43	46	47	49	50	52	57	67
20	26	30	36	38	39	40	44	47	48	50	51	53	58	68
22	28	32	38	40	41	42	46	49	50	52	53	55	60	70
24	30	34	40	42	43	44	48	51	52	54	55	57	62	72
26	32	36	42	44	45	46	50	53	54	56	57	59	64	74
28	34	38	44	46	46	48	52	55	56	58	59	61	66	76
29	35	39	45	47	48	49	53	56	57	59	60	62	67	77
30	36	40	46	48	49	50	54	57	58	60	61	63	68	78
32	38	42	48	50	51	52	56	59	60	62	63	65	70	80
34	40	44	50	52	53	54	58	61	62	64	65	67	72	82
36	42	46	52	54	55	56	60	63	64	66	67	69	74	84
38	44	48	54	56	57	58	62	65	66	68	69	71	76	86
39	45	49	55	57	58	59	63	66	67	69	70	72	77	87
41	47	51	57	59	60	61	65	68	69	71	72	74	79	89
44	50	54	60	62	63	64	68	71	72	74	75	78	82	92

© EMKA Beschlagteile GmbH & Co. KG • 2018 • www.emka.com

Version 4
Rod control

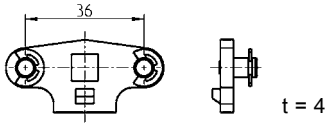

2-point rod control, m.s. zinc pl.	
	1000-U167

Note

This catalogue page does not show all available cams.
Other versions such as:
– Cam without catch
– Cams with other H and L dimension
– Cams with recess in the opposite direction
– etc.
please ask.

	Version 1			Version 1		Version 2
	L = 45 m.s. zinc pl.	L = 45 AISI 304	L = 45 AISI 316	L = 35 m.s. zinc pl.	L = 35 Polyamide GF black ①	Polyamide GF black
	1000-112	-	-	-	-	-
	1000-22	1000-221	1000-221-PD	-	-	-
	1000-113	-	-	-	-	-
	1000-21	1000-223	1000-223-PD	-	-	-
	1000-20	-	-	-	-	-
	1000-19	1000-225	1000-225-PD	-	-	-
	-	-	-	-	1000-5043-SI	-
	1000-18	-	-	-	-	-
	1000-17	1000-227	1000-227-PD	1000-5046	1000-5046-SI	1000-386-18
	1000-16	1000-228	1000-228-PD	1000-5161	-	1000-386-20
	1000-15	1000-179	1000-179-PD	1000-5119	-	1000-386-22
	1000-14	1000-229	1000-229-PD	-	-	1000-386-24
	1000-27	-	-	-	-	-
	1000-50	1000-230	1000-230-PD	-	-	-
	1000-13	1000-180	1000-180-PD	1000-5164	-	1000-386-28
	1000-28	-	-	-	-	1000-386-30
	1000-26	-	-	-	-	-
	1000-12	-	-	-	-	-
	1000-11	-	-	-	-	-
	1000-51	-	-	-	-	-
	1000-52	-	-	-	-	-
	1000-25	-	-	-	-	-
	1000-53	-	-	-	-	-
	1000-54	-	-	-	-	-
	1000-10	-	-	-	-	-
	1000-55	-	-	-	-	-
	1000-56	-	-	-	-	-

When using cams for rod operation you must be aware that the rods travel in an axial direction.

① only for light doors and covers

© EMKA Beschlagteile GmbH & Co. KG • 2018 • www.emka.com

Cam without catch and without recess

PROGRAM 1000

t = 4

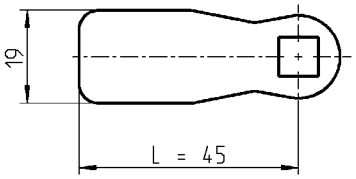

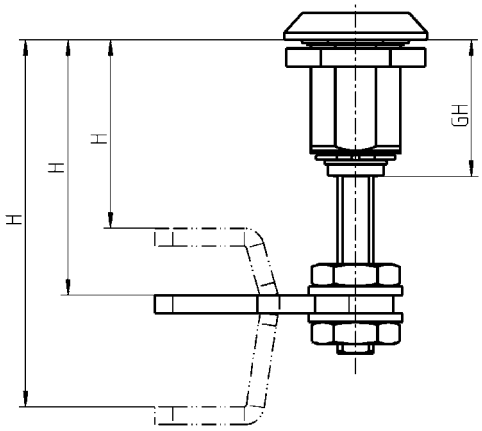

Cam m.s. zinc plated		
for GH = 31	**H**	**GH = 31**
straight	38 - 58	1000-476
offset +/- 14 mm	24 - 44 ; 52 - 72	1000-478
offset +/- 26 mm	12 - 32 ; 64 - 84	1000-477
for GH = 45	**H**	**GH = 45**
straight	52 - 72	1000-476
offset +/- 14 mm	38 - 58 ; 66 - 86	1000-478
offset +/- 26 mm	26 - 46 ; 78 - 98	1000-477
for GH = 64	**H**	**GH = 64**
straight	71 - 91	1000-476
offset +/- 14 mm	57 - 77 ; 85 - 105	1000-478
offset +/- 26 mm	45 - 65 ; 97 - 117	1000-477

On request:
– further cams

© EMKA Beschlagteile GmbH & Co. KG • 2018 • www.emka.com

Notes

© EMKA Beschlagteile GmbH & Co. KG • 2018 • www.emka.com

Key
PROGRAM 1004

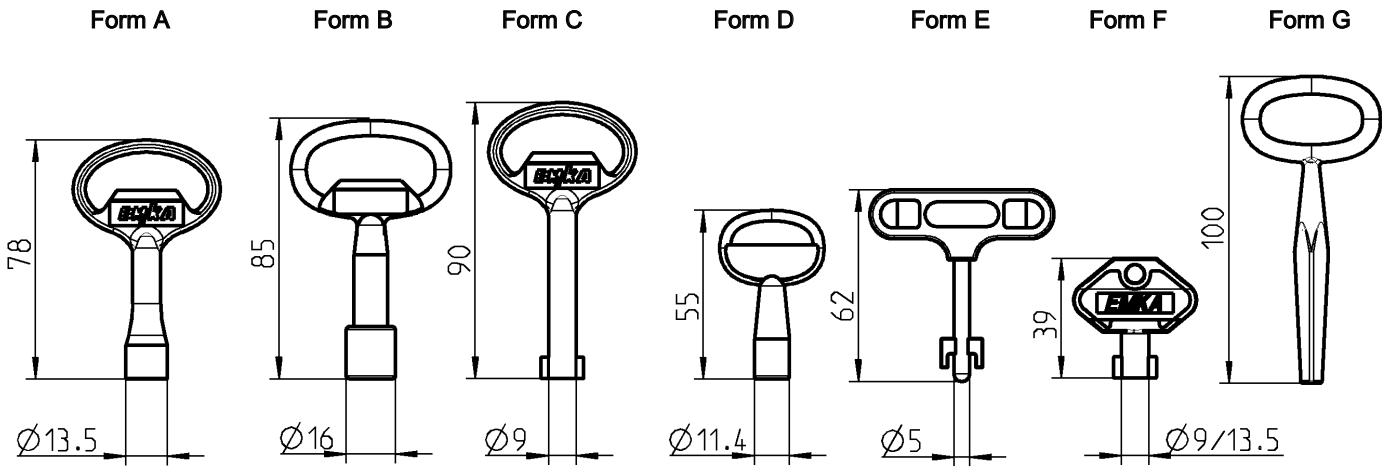

Keys can be supplied on request with customer logo
Minimum quantity: Form A, B, C, D 2,000 pieces
Minimum quantity: Form E, F, H 5,000 pieces

Key form	A	B	C	D	E	F	G
	Zinc die black powder-coated	Zinc die black powder-coated	Zinc die black powder-coated	Zinc die black powder-coated	Zinc die/ polyamide black	Polyamide GF black	GTW nickel
Square 6	1004-18	–	–	1004-20	–	1004-37	–
Square 7	1004-01	–	–	–	–	1004-36	–
Square 8	1004-02	–	–	–	–	1004-35	–
Triangular 6,5	–	–	–	1004-21	–	–	–
Triangular 6.5 CNOMO	1004-26	–	–	–	–	–	–
Triangular 7	1004-03	–	–	–	–	1004-39	–
Triangular 8	1004-04	–	–	–	–	1004-38	–
Triangular 10	–	1004-24	–	–	–	–	–
Crown type	–	1004-31	–	–	–	–	–
Eastern Europe Ø13 half round	–	1004-42	–	–	–	–	–
Double bit 3	–	–	1004-05	–	–	1004-34	–
Double bit 5	–	–	1004-06	–	–	1004-33	–
Male hexagon 11.1	–	1004-54	–	–	–	–	–
Daimler Benz	1004-17	–	–	–	–	–	–
FIAT	–	–	–	–	1004-41	–	–
Square male 6	1004-29	–	–	–	–	–	–
Square male 8	1004-30	–	–	–	–	–	–
Square male 6 – 9.5	–	–	–	–	–	–	1004-19
Hexagon head 8 with bore hole	1004-49	–	–	–	–	–	–
Tube	–	–	–	1004-51	–	–	–

© EMKA Beschlagteile GmbH & Co. KG • 2018 • www.emka.com

Form H

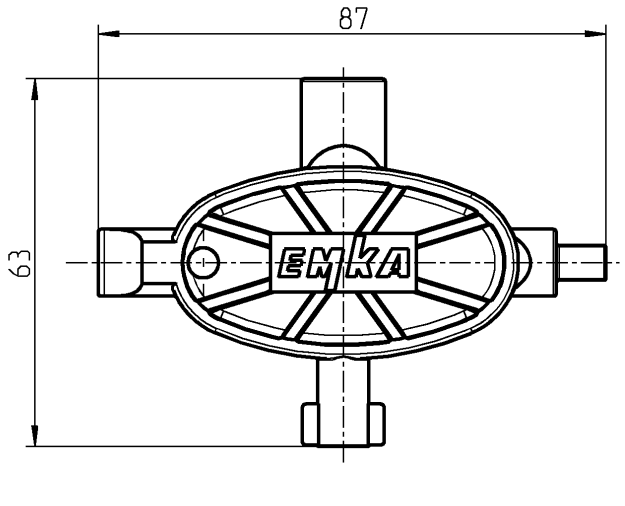

Form H, universal key polyamide blue	
Square male 6, Square 8, double bit 5 and slot insert	1004-48

Form I

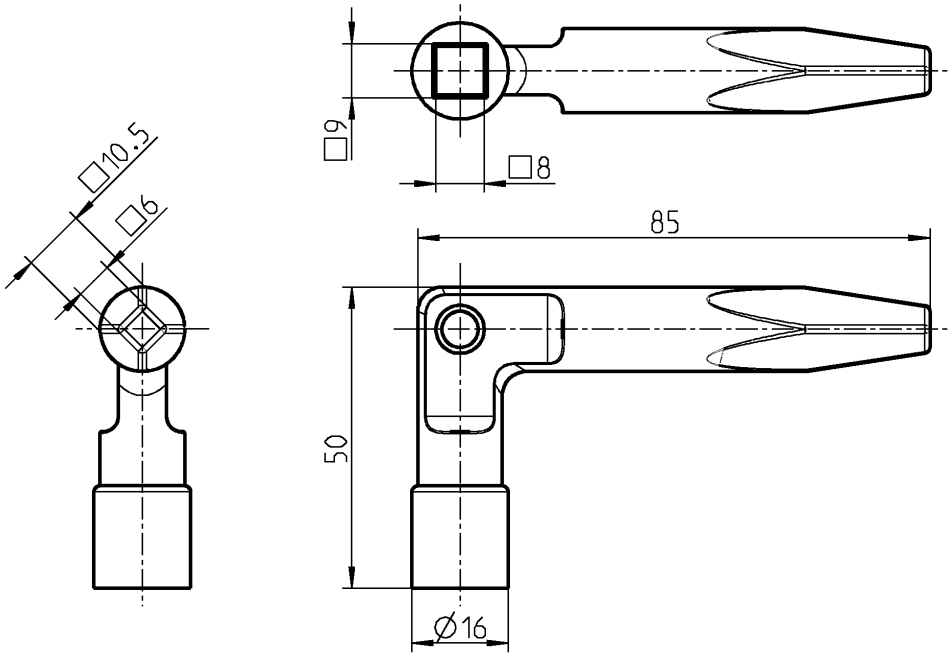

Form I, railway version, zinc die black	
Square 8 - 9; square male 6 - 10.5	1004-52

Stainless steel key on request

Slam lock
PROGRAM 1085

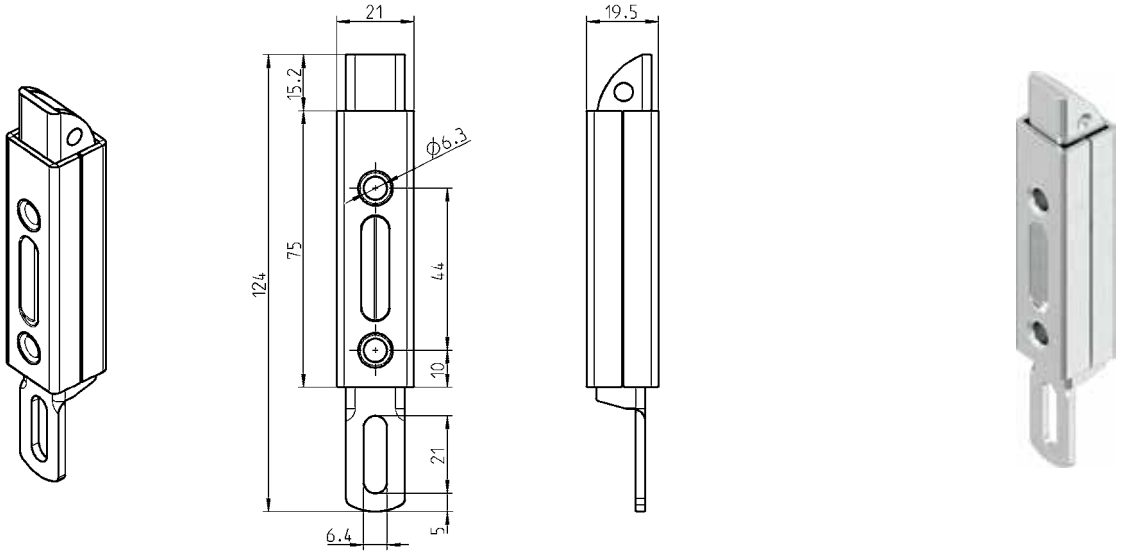

Slam lock m.s. zinc plated; with spring	
	1085-U1

Slam locks with different tensions on request

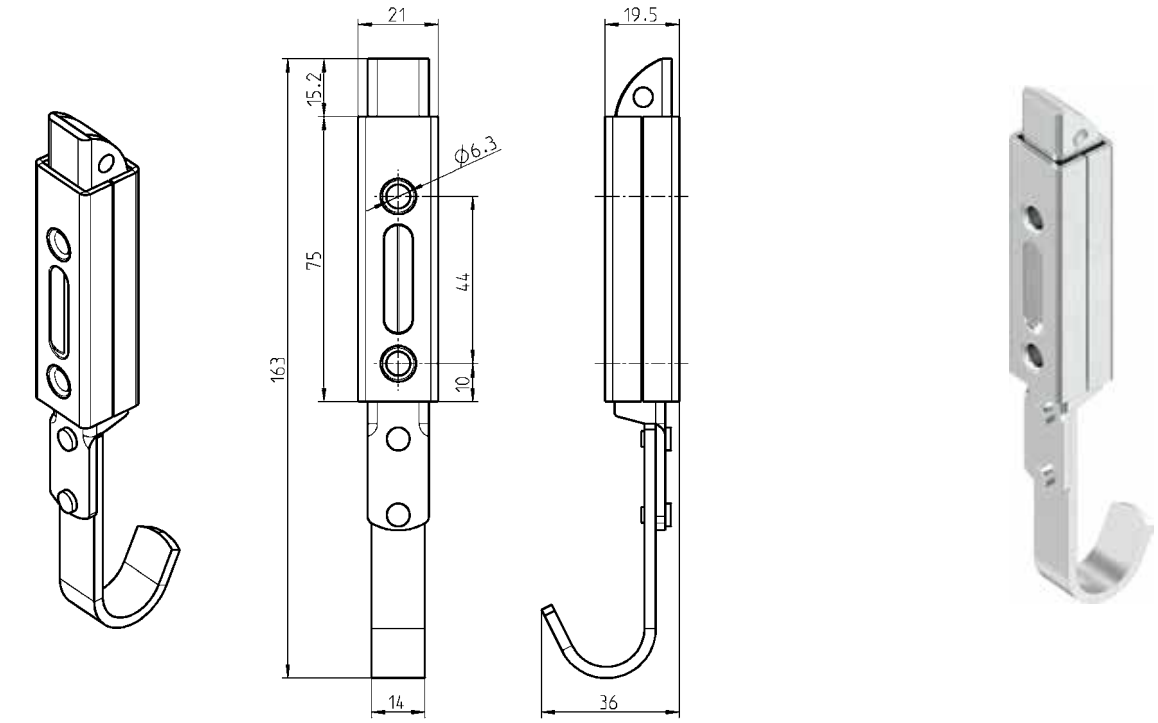

Slam lock m.s. zinc plated; with spring	
	1085-SU8

Slam locks with different tensions on request

© EMKA Beschlagteile GmbH & Co. KG • 2018 • www.emka.com

Slam lock
PROGRAM 1085

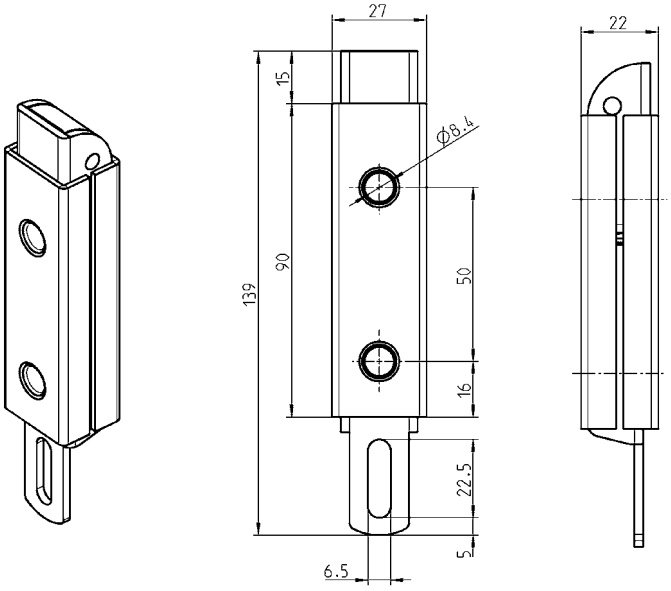

Slam lock m.s. zinc plated; with spring	
	1085-SU7

Slam locks with different tensions on request

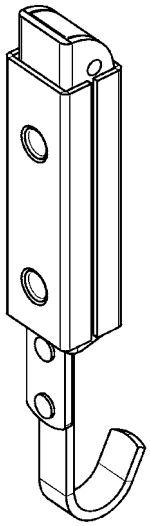

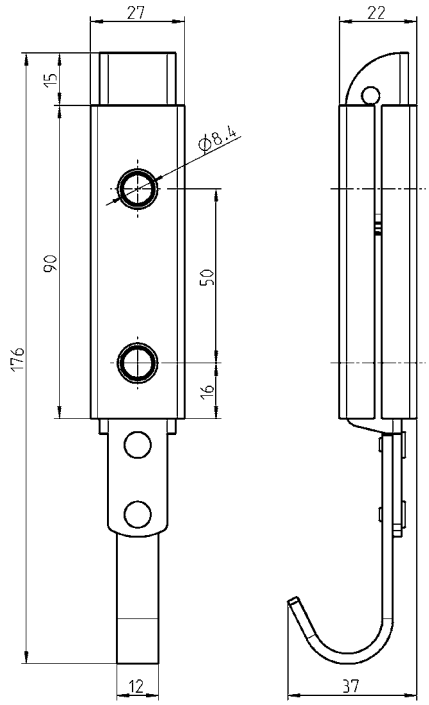

Slam lock m.s. zinc plated; with spring	
	1085-SU6

Slam locks with different tensions on request

Slam lock
PROGRAM 1085

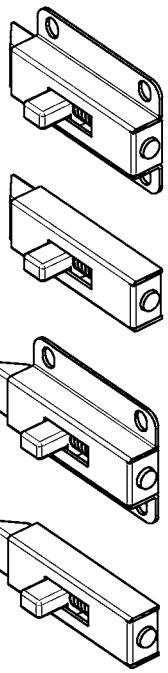

Version A

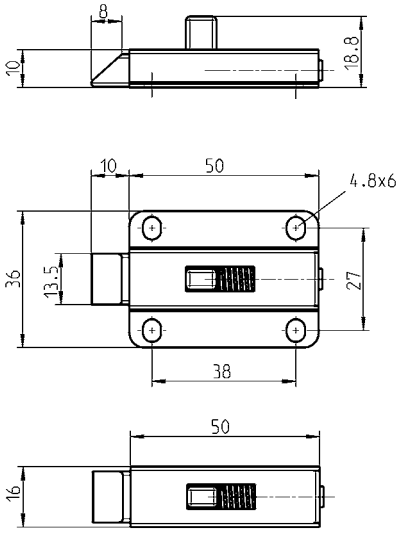

Version B

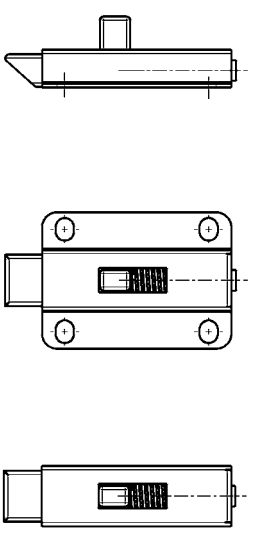

Slam-lock m.s. zinc plated resp. m.s. raw, locking bolt zinc die zinc plated		
	Version A	**Version B**
screw-on m.s. zinc plated	1053-U1	1053-U2
weld-on m.s. raw	1053-U3	1053-U4

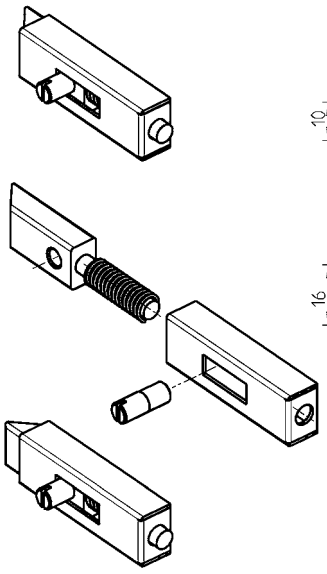

Version A

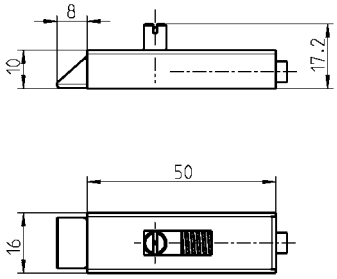

Version B

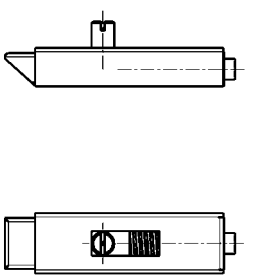

Customer can unassemble for welding on

Slam-lock m.s. raw, locking bolt zinc die zinc plated		
	Version A	**Version B**
weld-on	1053-U5	1053-U6

© EMKA Beschlagteile GmbH & Co. KG • 2018 • www.emka.com

Notes

© EMKA Beschlagteile GmbH & Co. KG • 2018 • www.emka.com

Latch lock
PROGRAM 1001

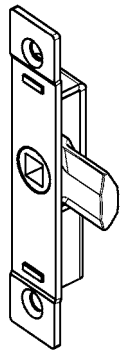

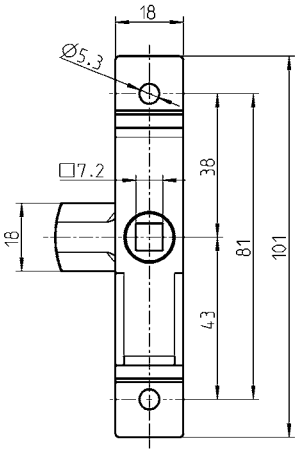

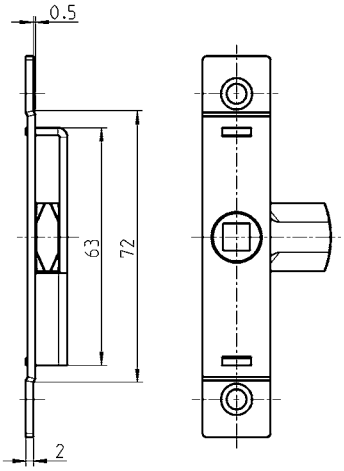

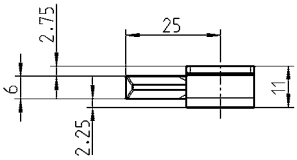

- Door edge to sq drive c/l approx. 9.5 mm

Housing m.s. zinc plated; cam zinc die raw; with spring	
	1001-U43

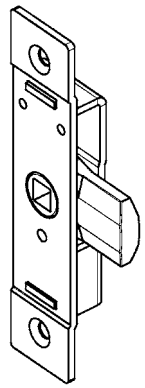

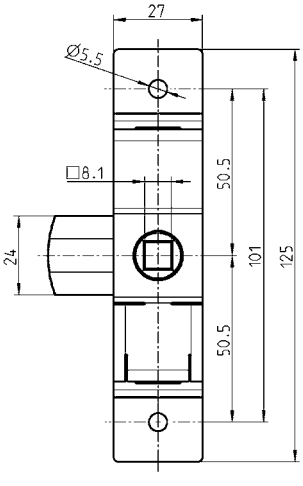

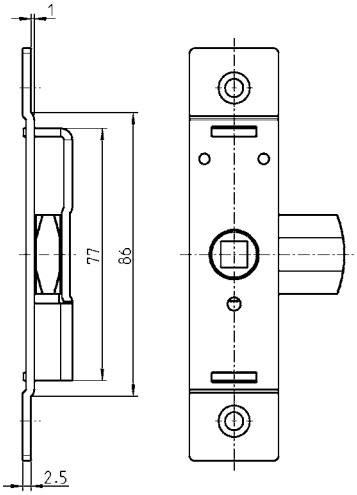

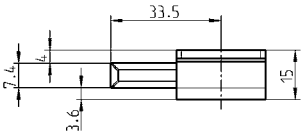

- Door edge to sq drive c/l approx. 13 mm

Housing m.s. zinc plated; cam zinc die raw; with spring	
	1001-U44

© EMKA Beschlagteile GmbH & Co. KG • 2018 • www.emka.com

Hook latch
Dead-bolt lock
PROGRAM 1001, 1080

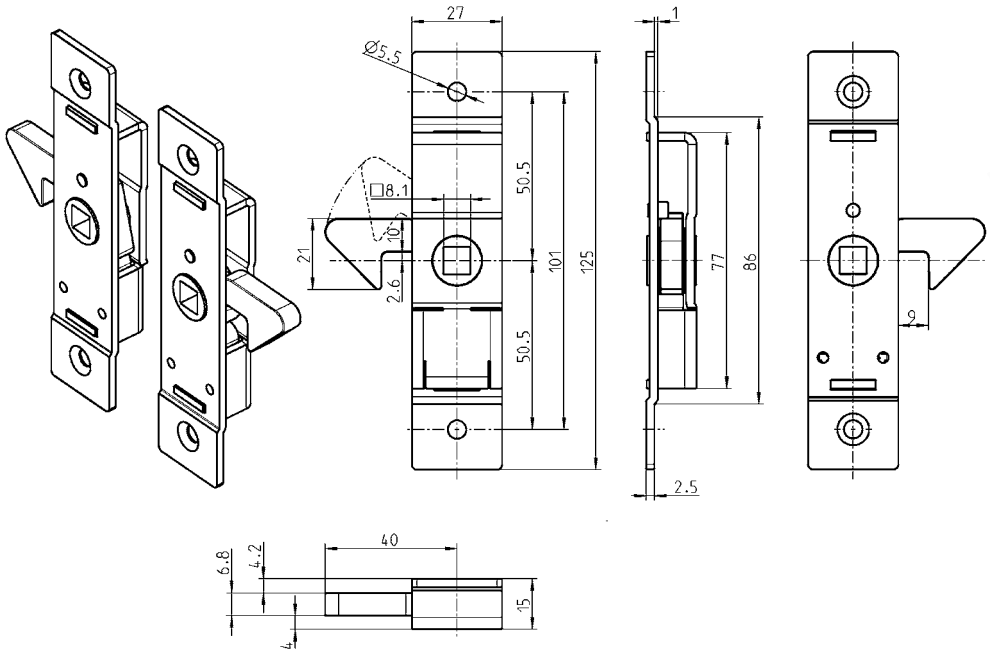

■ Door edge to sq drive c/l approx. 13 mm

Housing m.s. zinc plated; hook cam zinc die raw; with spring	
right, as depicted	1001-U45-RE
left, mirror image	1001-U45-LI

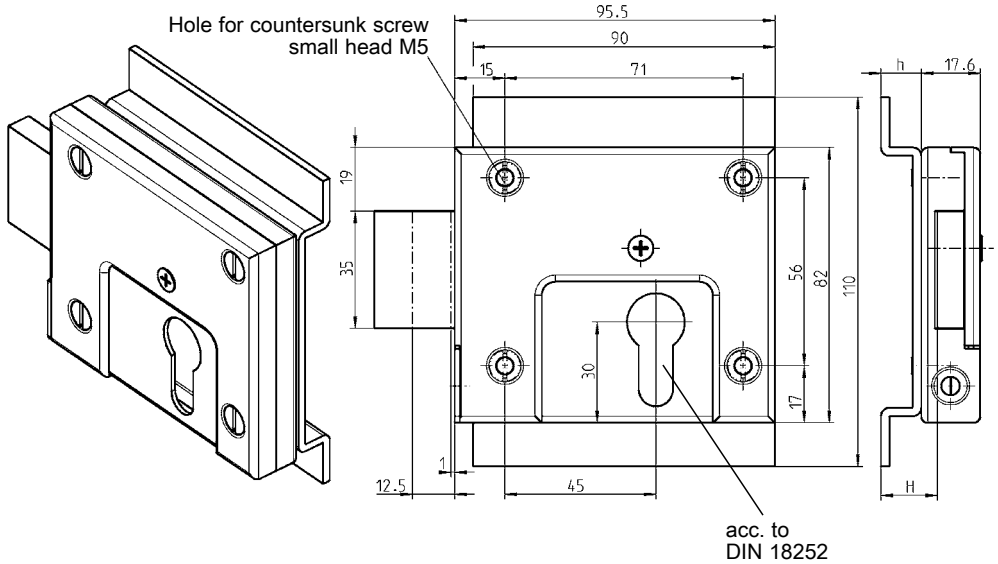

Dead-bolt lock for both LH/RH

small head = DIN ISO 2009, 2010, 7046-1, 7046-2, 7047

Dead-bolt lock m.s. zinc plated			
			1080-U1
Lock support m.s. raw			
H	**h**	**Profile cylinder length**	
16,5	12	40	1080-01
26,5	22	50	1080-02

On request:
– further lock versions

© EMKA Beschlagteile GmbH & Co. KG • 2018 • www.emka.com

3 point latches and inserts

PROGRAM 1049, 1068

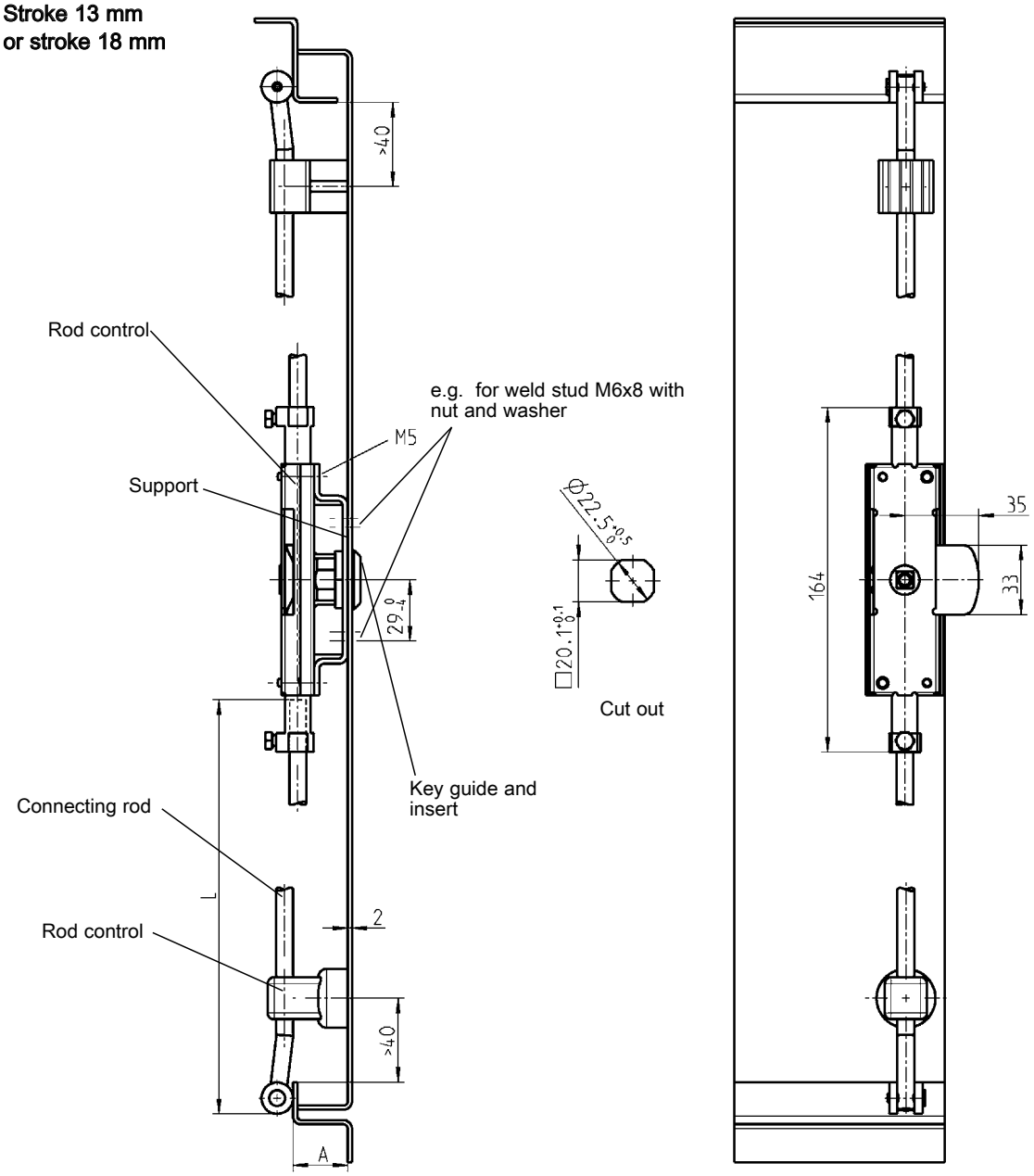

Latch m.s. zinc pl.			Latch m.s. zinc pl. for profile cylinder		
	Stroke 13	Stroke 18			Stroke 18
RH	1049-U1	1049-U19	RH	–	1068-U1
LH	1049-U2	1049-U20	LH	–	1068-U2
Support m.s. zinc plated			**Support m.s. zinc plated**		
	A20	A26		A20	A26
RH/LH	1001-47	1001-50	RH	1001-45	1001-48
			LH	1001-46	1001-49

© EMKA Beschlagteile GmbH & Co. KG • 2018 • www.emka.com

Stroke 18 mm

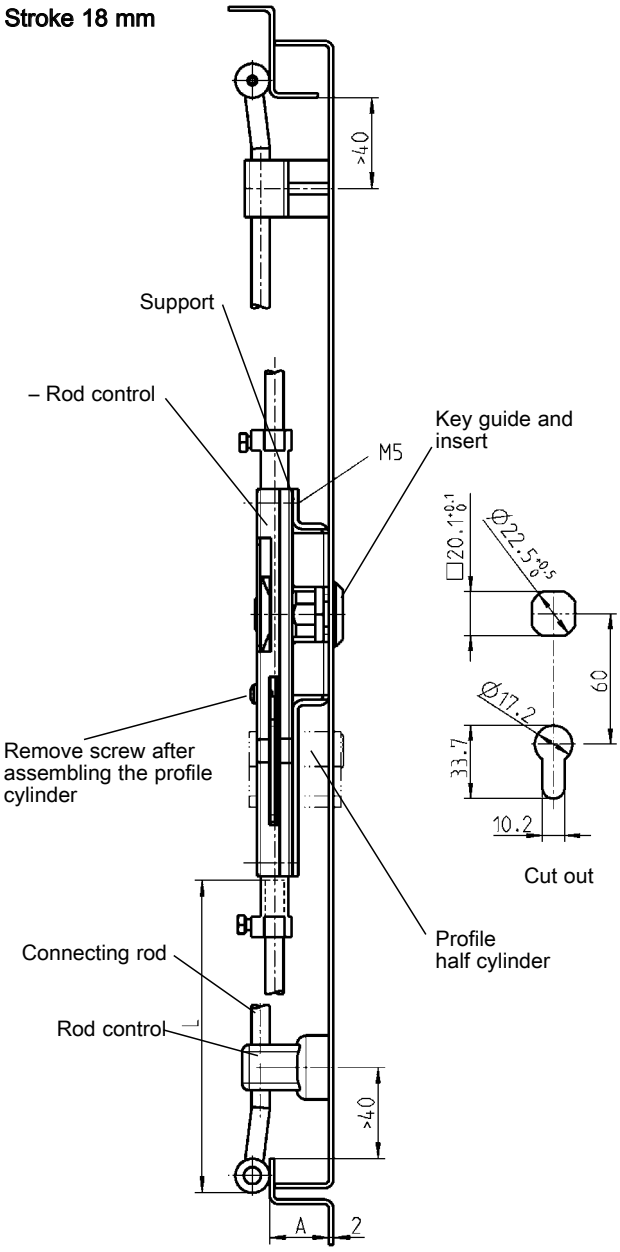

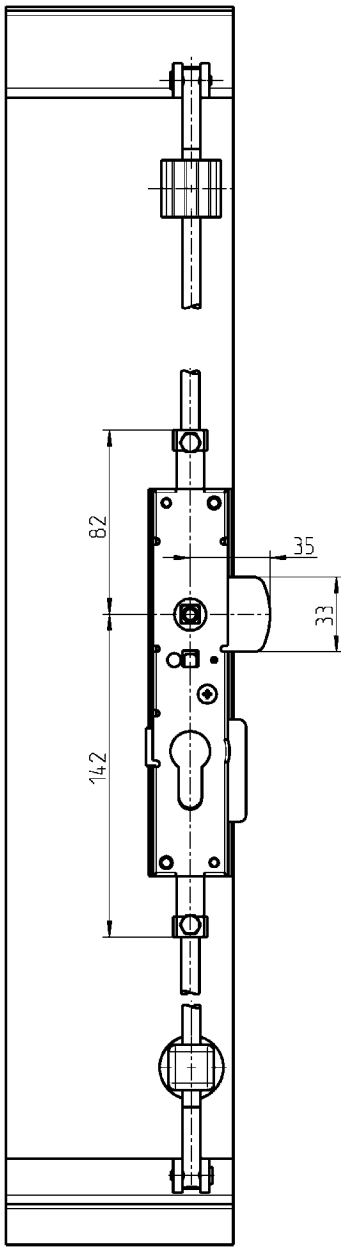

RH-version pictured

Key guide zinc die Chrome plated or powder coated black with nut m.s. zinc plated		
chrome pl.	**A20**	**A26**
for square and triangular	1001-U13	1001-U14
for double bit	1001-U15	1001-U16
for Daimler Benz	1001-U17	1001-U18
for FIAT	1001-U32	–
black powder-coated		
for square and triangular	1001-U24	1001-U25
for double bit	1001-U26	1001-U27
for Daimler Benz	1001-U28	1001-U29
for FIAT	1001-U33	–

Insert chrome plated zinc alloy		
Square	6	1000-59
Square	7	1000-04
Square	8	1000-05
Triangular	7	1000-06
Triangular	8	1000-07
for double bit	3	1000-08
for double bit	5	1000-09
for Daimler Benz		1000-64
for FIAT		1000-352
IP 65 achieved by:		
Flat seal		1000-23
O-ring		1000-24

Further parts see page

– T-Handle 1.3-140
– L-handle 1.3-140
– Connecting rods 1.3-160
– Rod guide on request
– Profile half cylinder on request
– Key 1.2-420
– Escutcheon on request
– Adapter system for insulated doors 1.3-150

© EMKA Beschlagteile GmbH & Co. KG • 2018 • www.emka.com

Handle-System
PROGRAM 1091

For doors opening outwards (out-swing)

NEW

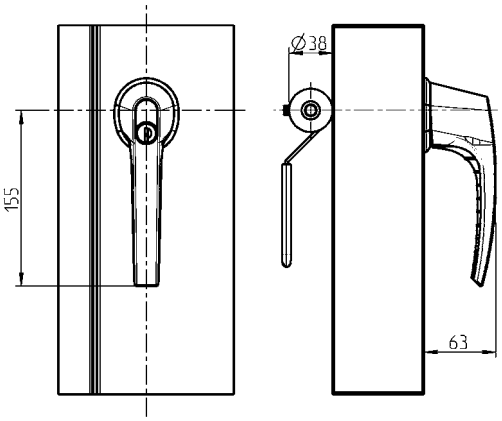

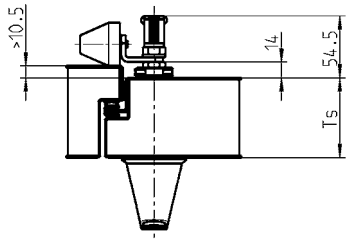

Example for arrangement:

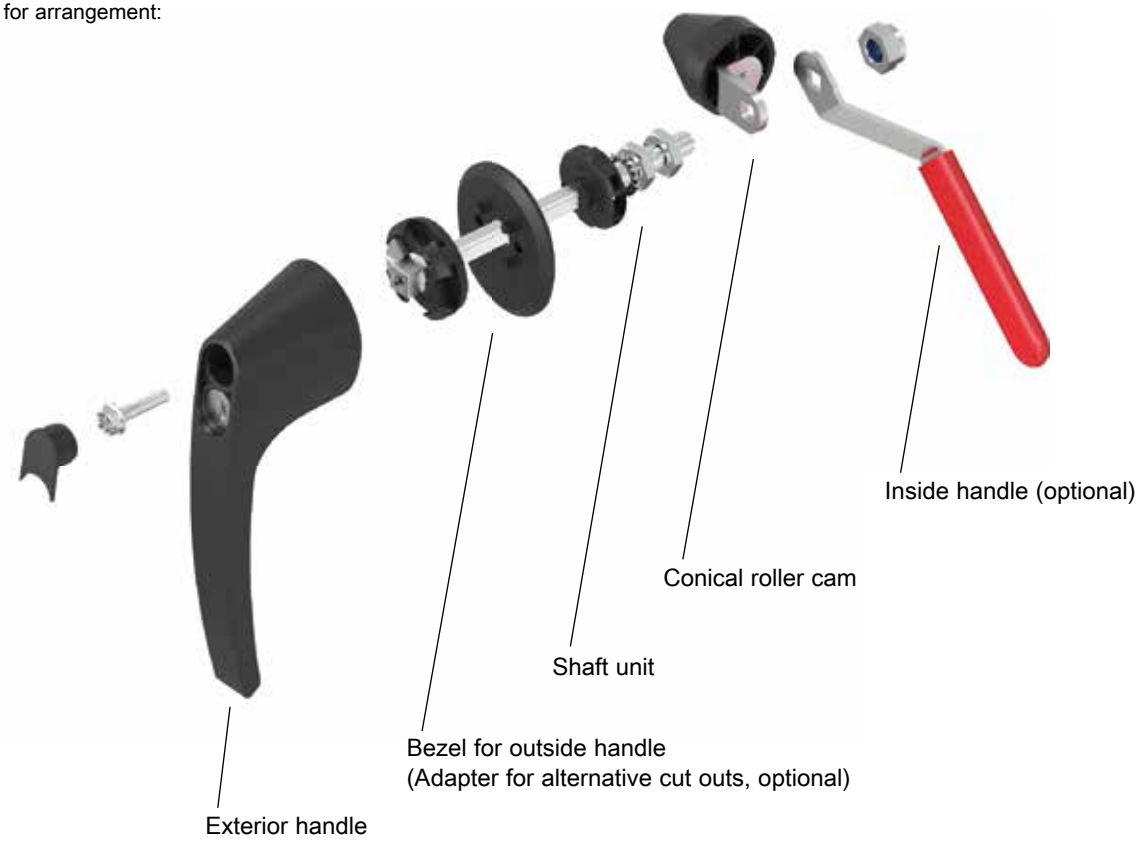

© EMKA Beschlagteile GmbH & Co. KG • 2018 • www.emka.com

Exterior handle

PROGRAM 1091

External handle for outward opening doors (Out-Swing)

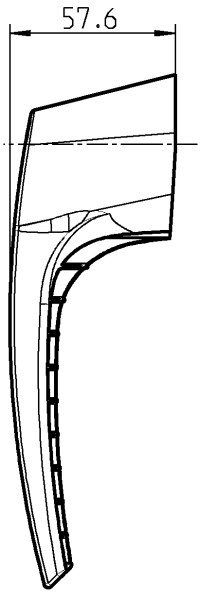

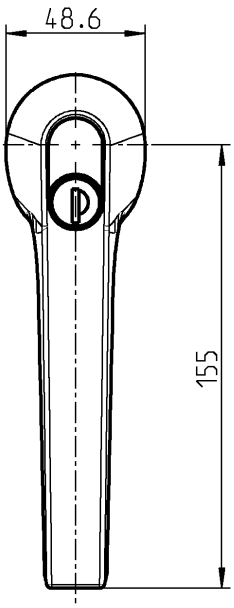

Handle polyamide GF black screw m.s. zinc plated; cover cap polyethylene black	
non locking	1091-U159
with insert zinc die chrom plated; locking cam and countersunk screw m.s. zinc plated; spacer ring brass, with o-ring	
Double bit 5	1091-U160
with round cylinder zinc die with stainless steel cap and dust cap; locking cam m.s. zinc plated; adapter AISI 316; countersunk screw m.s. zinc plated. Each round cylinder has one silver steel key with polyamide grip GF black.	
keyed EK 333	1091-U161
Keyed different	on request

Further parts see page

– Overview 1.3-132
– Conical roller cam 1.3-138
– Bezel 1.3-136
– Shaft unit 1.3-136
– Interior handle 1.3-138

© EMKA Beschlagteile GmbH & Co. KG • 2018 • www.emka.com

Shaft Unit;
Bezel for Outside Handle
PROGRAM 1091

EMKA Beschlagteile

Shaft unit (RH and LH applicable)

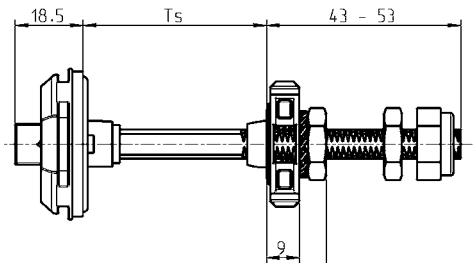

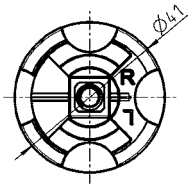

The readability of the letter (R / L) indicates the orientation of the axis to the door stop.

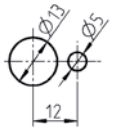

Cut out
for door stop right.
For door stop on the left mirror image.

Bezel inside
for quick assembly

Shaft unit: Mild steel shaft with 90° stop zinc die in assembly zinc plated; bezel outside zinc die black powder coated; bezel inside polyamide GF black; nut and counter nut m.s. zinc plated, with seal	
Ts = 25 up to 35 mm	1091-U158-25
Ts = 50 up to 60 mm	1091-U158-50
Ts = 75 up to 85 mm	1091-U158-75
Ts = 100 up to 110 mm	1091-U158-100

Bezel for outside handle for adaption of diverse cut out

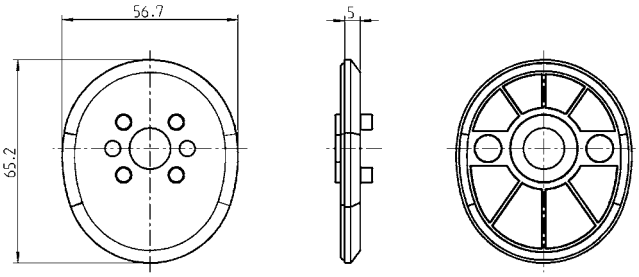

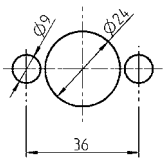

Cut out; Version 1

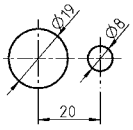

Cut out; Version 2

Bezel for exterior handle zinc die black powder coated, with seal	
Version 1	1091-132-01G
Version 2	1091-132-02G

Further parts see page

– Overview 1.3-132
– Exterior handle 1.3-134
– Conical roller cam 1.3-138
– Inside handle 1.3-138

© EMKA Beschlagteile GmbH & Co. KG • 2018 • www.emka.com

Conical Roller Cam; Inside Handle

PROGRAM 1000, 1091

Conical roller cam big for inside the door

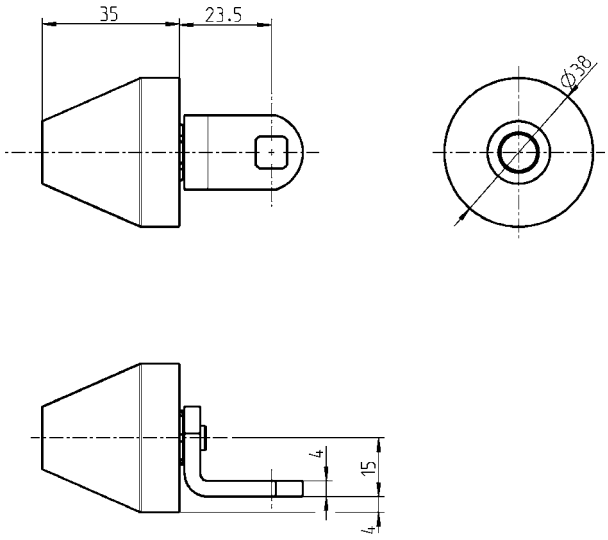

Roller polyamide GF black; cam and shaft m.s. zinc plated	
	1000-U897

Inside handle

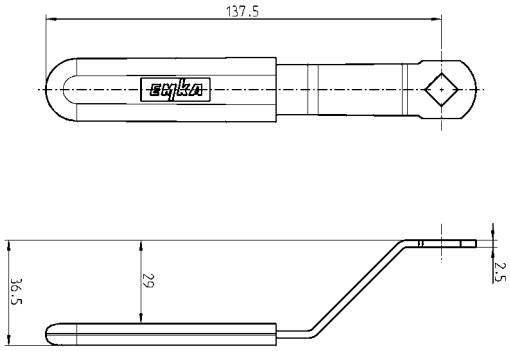

Inside handle m.s. zinc plated; end stay polyamide GF red	
	1091-133

Inside handle

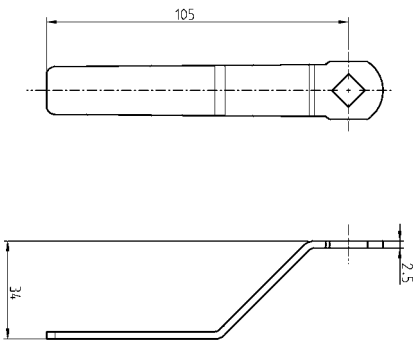

Inside handle m.s. zinc plated	
	1091-29C

Further parts see page

– Overview 1.3-132
– Exterior handle 1.3-134
– Bezel 1.3-136
– Shaft unit 1.3-136

© EMKA Beschlagteile GmbH & Co. KG • 2018 • www.emka.com

T-handle
L-handle
PROGRAM 1102, 1103

T-Handle

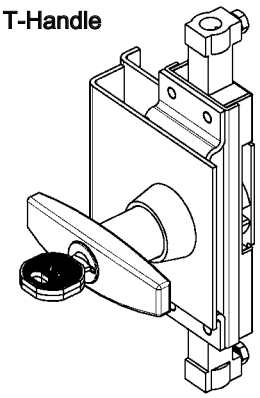

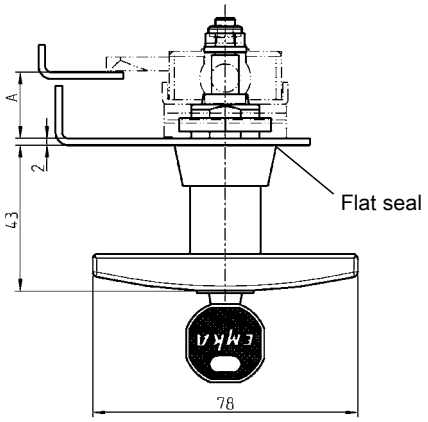

L-handle

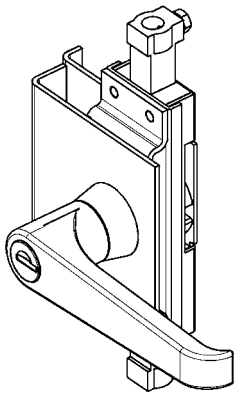

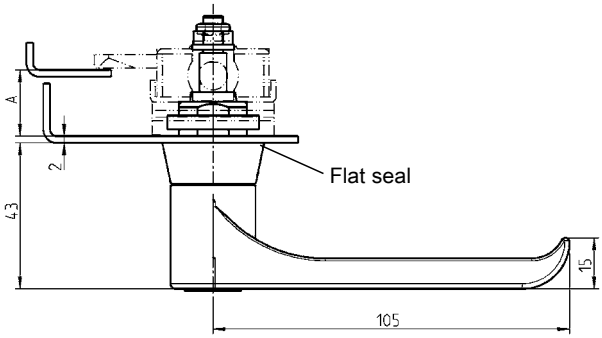

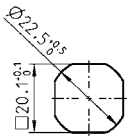

Cut out

T-Handle zinc die with nut and washer m.s. zinc pl., with seal.
Each round cylinder has one silver steel key with polyamide grip GF black.

		non locking	Keyed EMKA 333	Keyed different
A20	chrome plated	1102-U1	1102-U3	1102-U5
	black powder-coated	1102-U7	1102-U9	1102-U11
A26	chrome plated	1102-U2	1102-U4	1102-U6
	black powder-coated	1102-U8	1102-U10	1102-U12

L-Handle zinc die with nut and washer m.s. zinc pl., with seal.
Each round cylinder has one silver steel key with polyamide grip GF black.
– Insert spring loaded –

			chrome plated		black powder-coated	
			A20	A26	A20	A26
non locking		(IP 65)	1103-U1	1103-U2	1103-U21	1103-U22
Keyed EMKA 333		(IP 65)	1103-U3	1103-U4	1103-U23	1103-U24
Keyed different		(IP 65)	1103-U5	1103-U6	1103-U25	1103-U26
Square	7	IP 65 (on request)	1103-U7	1103-U8	1103-U27	1103-U28
Square	8		1103-U9	1103-U10	1103-U29	1103-U30
Triangular	7		1103-U11	1103-U12	1103-U31	1103-U32
Triangular	8		1103-U13	1103-U14	1103-U33	1103-U34
Double bit	3		1103-U15	1103-U16	1103-U35	1103-U36
Double bit	5		1103-U17	1103-U18	1103-U37	1103-U38
Daimler Benz			1103-U19	1103-U20	1103-U39	1103-U40

Further parts see page
– Rod control 1.3-130
– Adapter system for insulation doors 1.3-150
– Key 1.2-420
– Connecting rods 1.3-160

© EMKA Beschlagteile GmbH & Co. KG • 2018 • www.emka.com

Adapter system for insulation doors

PROGRAM 1001

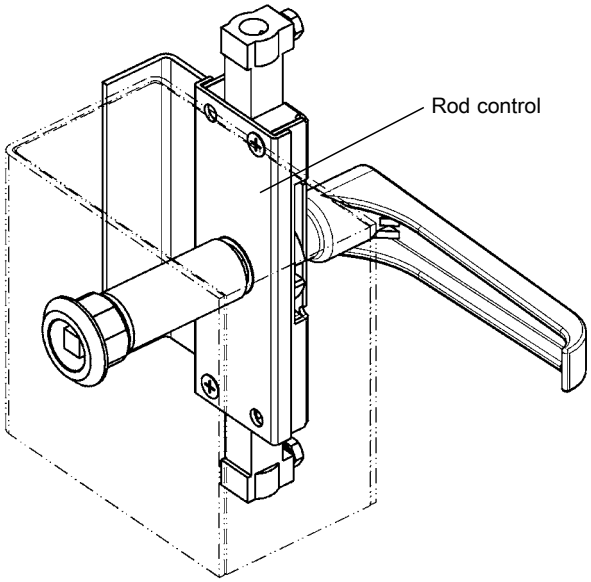

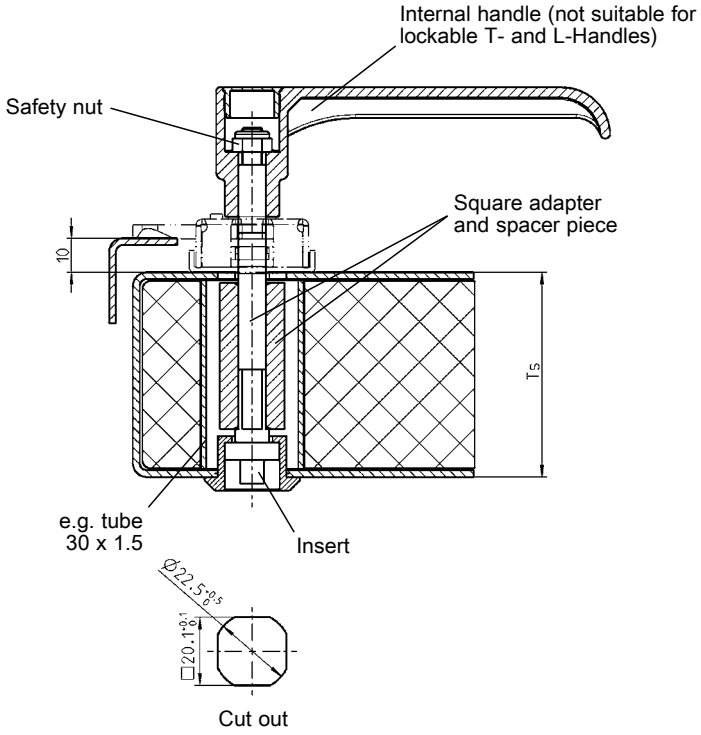

System can be pre-assembled with handle or insert and retained with M6 safety nut.

Insert, m.s. zinc plated key guide zinc die chrome plated safety nut m.s.zinc plated		Door gauge Ts	Square adapter m.s.z.pl.	Spacer piece aluminium
Square 7	1001-U21	20	–	–
Square 8	1001-U22	40	1x1001-65	1001-69
Double bit 5	1001-U23	50	1x1001-66	1001-70
Adapter for interior handle m.s.zinc plated		60	1x1001-67	1001-71
	1001-65	80	2x1001-66	1001-72
Int. handle polyamide black		100	2x1001-67	1001-73
	1000-U829			

Further parts see page

– Rod control 1.3-130
– T- or L-Handle A = 26 1.3-140
– Key 1.2-420
– Connecting rods 1.3-160
– Lock against rotation on request

© EMKA Beschlagteile GmbH & Co. KG • 2018 • www.emka.com

Connecting rods
PROGRAM UNIVERSAL

Minimum quantity: 200 pieces
Lower quantities on request

Round rod
in fixed lengths

Program 1000

How to find dim. L
when pivot point is central

with adapter $\frac{\text{clear height - 40}}{2}$

with eye $\frac{\text{clear height - 12}}{2}$

L ≤ 1200

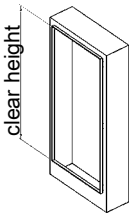

Order example: Part number for rod with rollers and a length L of 1034 mm = 1049-U18-L 1034

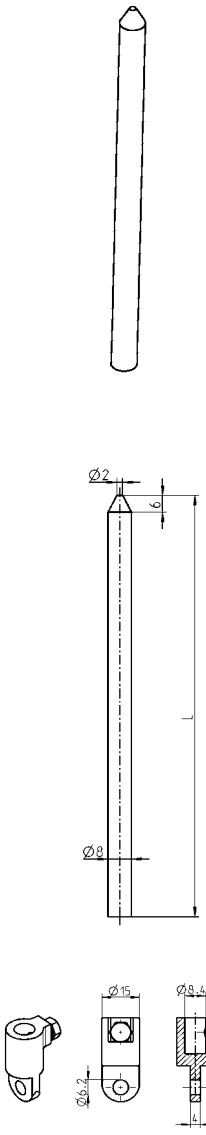

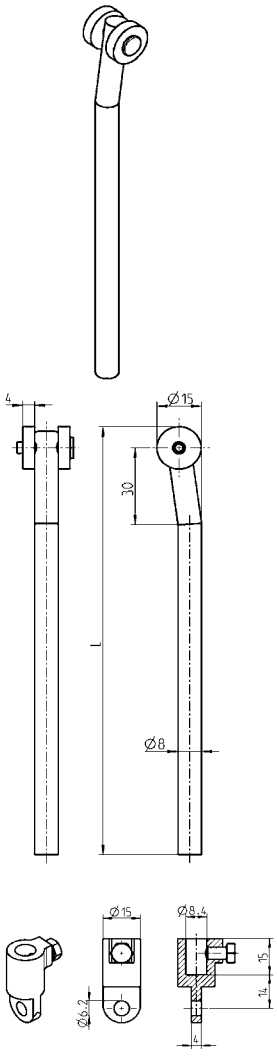

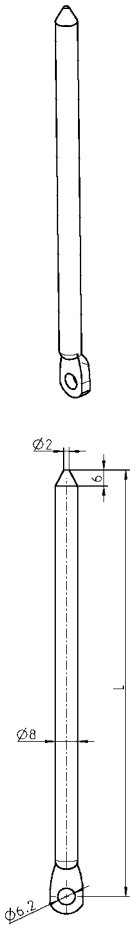

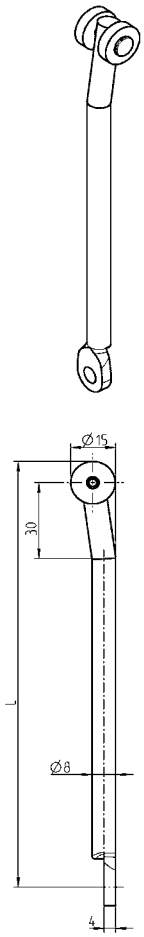

with pointed end m.s. zinc plated			m.s. zinc pl., with rollers polyamide black			with eye and pointed end m.s. zinc plated	with eye m.s. zinc pl. and rollers polyamide black (not suitable for program 1121 and 2121)
1049-19-L mm			1049-U18-L mm			1000-211-L mm	1000-U144-L mm
(1049-19-01 to -17 see price list)			(1049-U18-01 to -17 see price list)			(1000-211-01 bis -17 see price list)	(1000-U144-01 to -17 see price list)
adapter	**zinc die, m.s. z.pl.**	**AISI 303**	**adapter**	**zinc die, m.s. z.pl.**	**AISI 303**		**with eye AISI 304 and rollers polyamide black** (not suitable for program 1121 and 2121)
	1000-U49	1000-U141		1000-U49	1000-U141		1000-U538-L mm
							(1000-U538-01 bis -09 see price list)

© EMKA Beschlagteile GmbH & Co. KG • 2018 • www.emka.com

Round- and square rods in available lengths

EDELSTAHL Rost frei STAINLESS STEEL

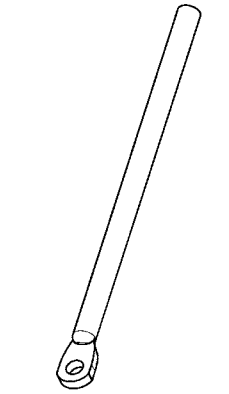
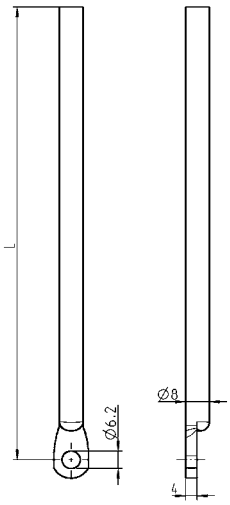
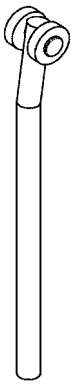
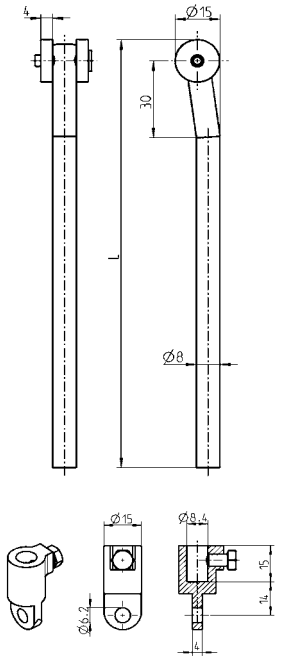
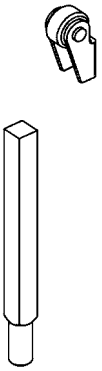
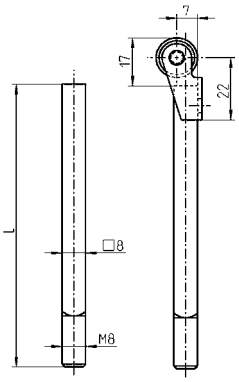

Round rod m.s. zinc pl.		Round rod m.s zinc pl. or AISI 304 with rollers polyamide black			Square rod m.s. zinc pl. suitable for catalogue page 2B-120	
L in mm		L in mm	m.s. z.pl.	AISI 304	L in mm	
400	1000-33	600	1049-U3	1049-U12	600	1001-11
500	1000-34	700	1049-U4	1049-U13	700	1001-12
600	1000-35	800	1049-U5	1049-U14	800	1001-13
700	1000-36	900	1049-U6	1049-U15	900	1001-14
800	1000-37	1000	1049-U7	1049-U16	1000	1001-15
900	1000-38	1100	1049-U8	1049-U17	1100	1001-16
1000	1000-39	1200	1049-U9	–	1200	1001-17
1100	1000-114	adapter	zinc die, m.s. z.pl.	AISI 303	Roller unit m.s. zinc pl., roller polyamide white	
1200	1000-115				–	1019-U1
			1000-U49	1000-U141		

© EMKA Beschlagteile GmbH & Co. KG • 2018 • www.emka.com

Toggle latches
with latch fastener and safety catch
PROGRAM 6000

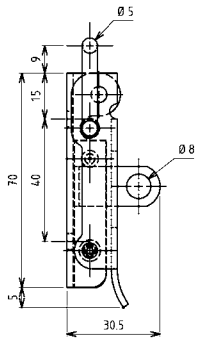

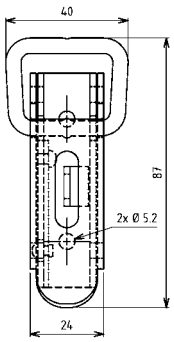

EDELSTAHL Rostfrei STAINLESS STEEL

Toggle latch with hard aperture resistance		
	without padlock facility	with padlock facility
Zinc plated steel DS plus Top Coat	6002-U75-JQ	6002-U74-JQ
Toggle latch with easy aperture resistance		
	without padlock facility	with padlock facility
Zinc plated steel DS plus Top Coat	6002-U77-JQ	6002-U73-JQ
AISI 304 drilled	6002-U77-PC	6002-U73-PC

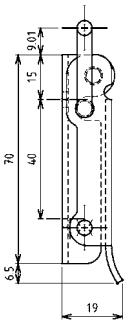

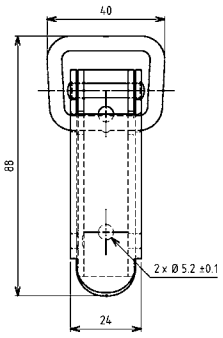

Toggle latch with easy aperture resistance, Economic Version		
	without padlock facility	with padlock facility
Zinc plated steel, drilled	6002-U76-JB	-

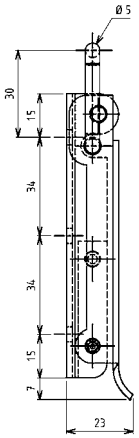

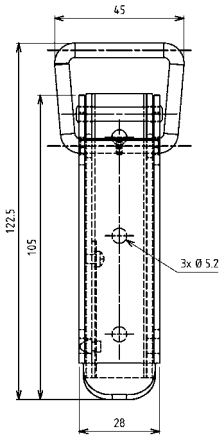

EDELSTAHL Rostfrei STAINLESS STEEL

Toggle latch with hard aperture resistance		
	without padlock facility	with padlock facility
Bare steel drilled	6002-U15-KA	6002-U14-KA
Zinc plated steel DS plus Top Coat	6002-U15-JQ	6002-U14-JQ
AISI 304 drilled	6002-U15-PC	6002-U14-PC

© EMKA Beschlagteile GmbH & Co. KG • 2018 • www.emka.com

Toggle latches
with springs for tolerance compensation
PROGRAM 6000

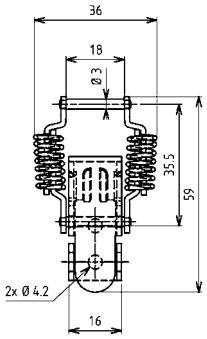

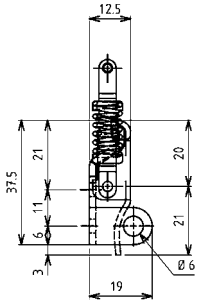

Toggle latch	without padlock facility	with padlock facility
Bare steel drilled	6004-U22-KA	6004-U23-KA
Zinc plated steel DS plus Top Coat	6004-U22-JQ	6004-U23-JQ
AISI 304 drilled	6004-U22-PC	6004-U23-PC

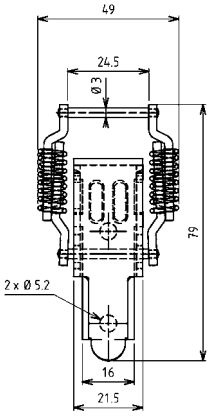

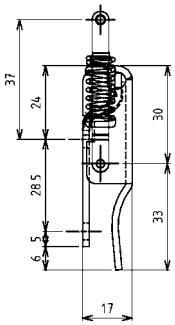

Toggle latch	without padlock facility	with padlock facility
Bare steel drilled	6004-U24-KA	6004-U25-KA
Zinc plated steel DS plus Top Coat	6004-U24-JQ	6004-U25-JQ
AISI 304 drilled	6004-U24-PC	6004-U25-PC

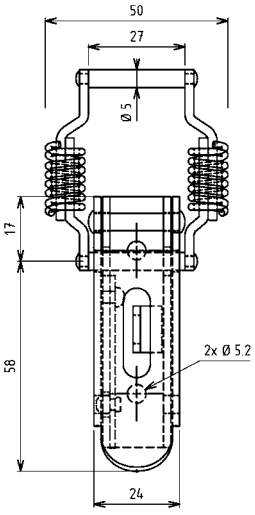

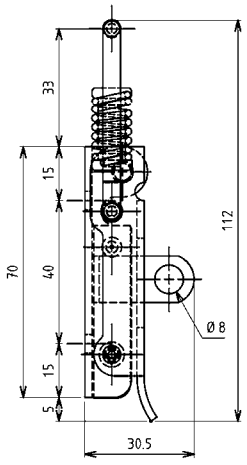

Toggle latch with hard aperture resistance		
	without padlock facility	with padlock facility
Bare steel drilled	6004-U26-KA	6004-U37-KA
Zinc plated steel DS plus Top Coat	6004-U26-JQ	6004-U37-JQ

Toggle latches with springs for tolerance compensation; adjustable toggle latches

PROGRAM 6000

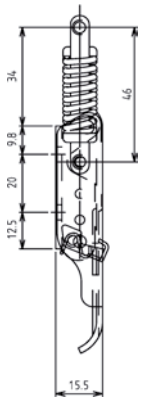

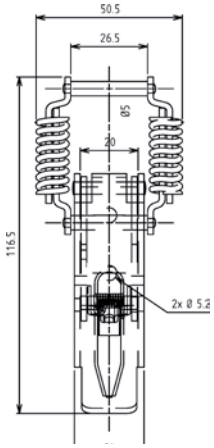

Toggle latch	Without locking latch	With locking latch
Zinc plated steel DS plus Top Coat	6004-U17-JQ	6004-U517-JQ
AISI 304 drilled	6004-U17-PC	6004-U517-PC

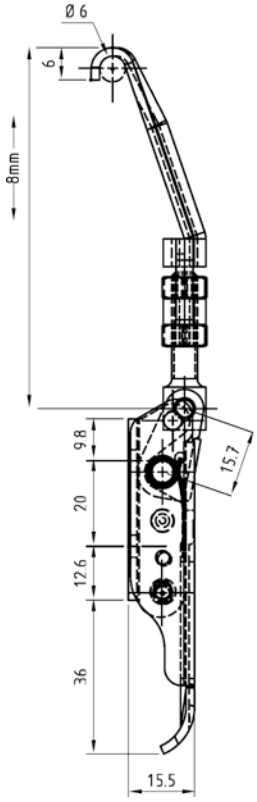

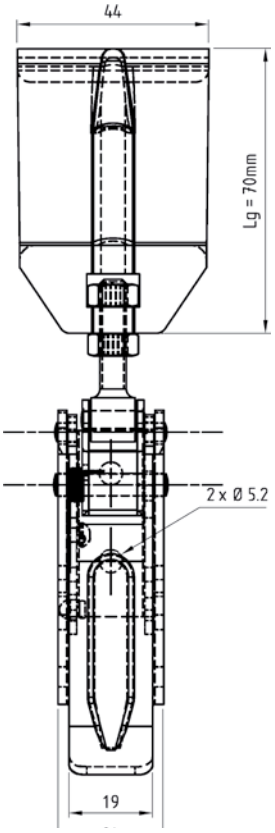

Toggle latch	Without locking latch	With locking latch
Zinc plated steel DS plus Top Coat	6008-U365-JQ	6008-U865-JQ
AISI 304 drilled	6008-U365-PC	6008-U865-PC

© EMKA Beschlagteile GmbH & Co. KG • 2018 • www.emka.com

Compression latches; Hooks

PROGRAM 6000

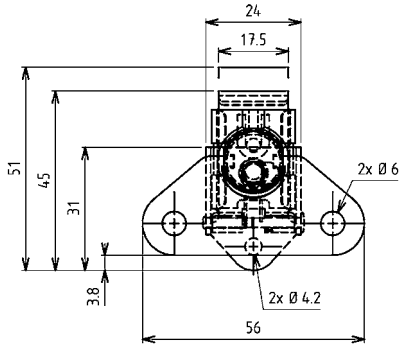

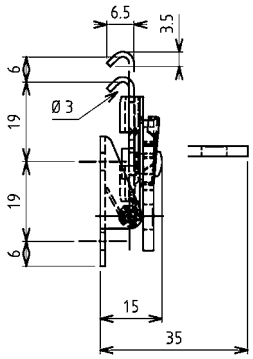

Compression latch	
Zinc plated steel DS plus Top Coat	6006-U10-JQ
AISI 304 drilled	6006-U10-PC

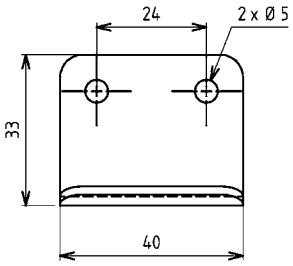

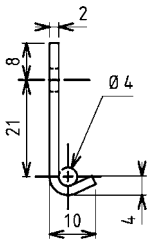

Catch plate	
Bare steel drilled	6010-18-KA
Zinc plated steel DS plus Top Coat	6010-18-JQ
AISI 304 drilled	6010-18-PC

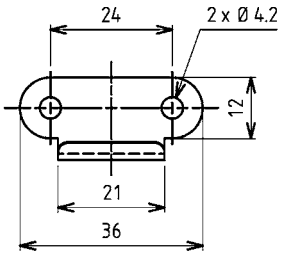

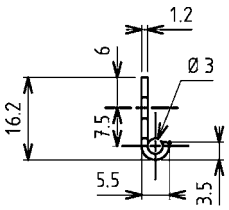

Catch plate	
Zinc plated steel DS plus Top Coat	6010-20-JQ
AISI 304 drilled	6010-20-PC

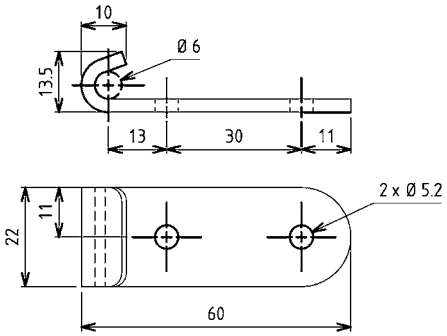

Catch plate	
Bare steel drilled	6010-12-KA
Zinc plated steel DS plus Top Coat	6010-12-JQ
AISI 304 drilled	6010-12-PC

© EMKA Beschlagteile GmbH & Co. KG • 2018 • www.emka.com

Rotary latch

PROGRAM 5072

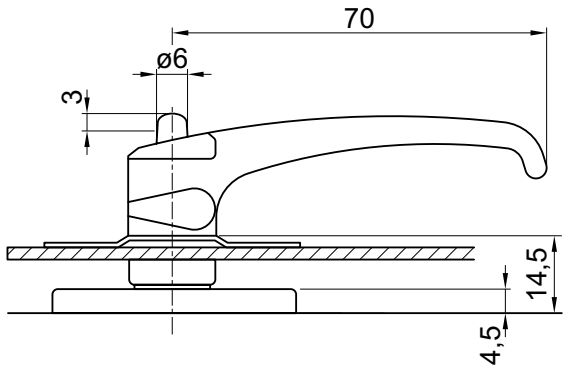

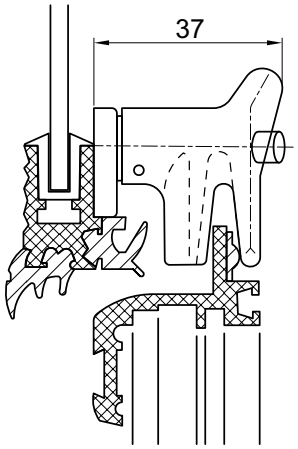

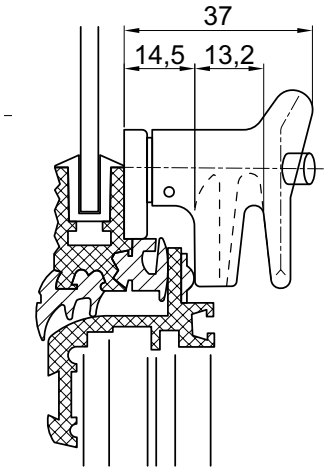

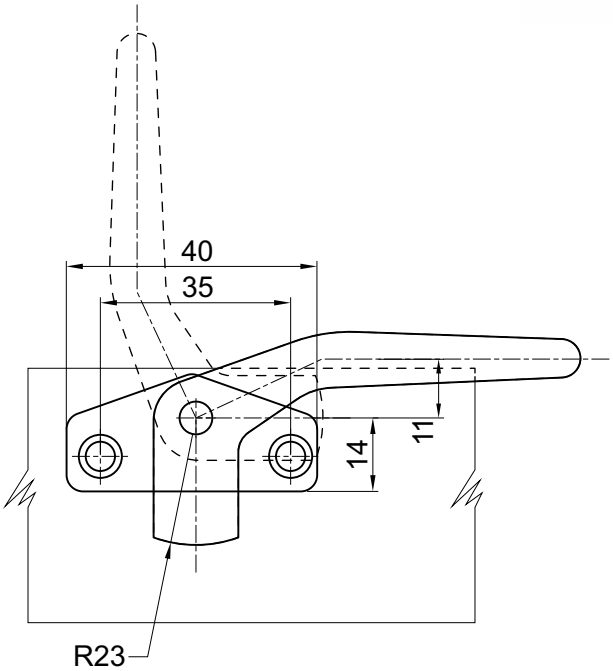

Rotary latch with vent position zinc die chrome plated	
right, as depicted	5072-U805-IA
left, mirror image	5072-U806-IA

© EMKA Beschlagteile GmbH & Co. KG • 2018 • www.emka.com

Window connection catch; striker plate

PROGRAM 5100

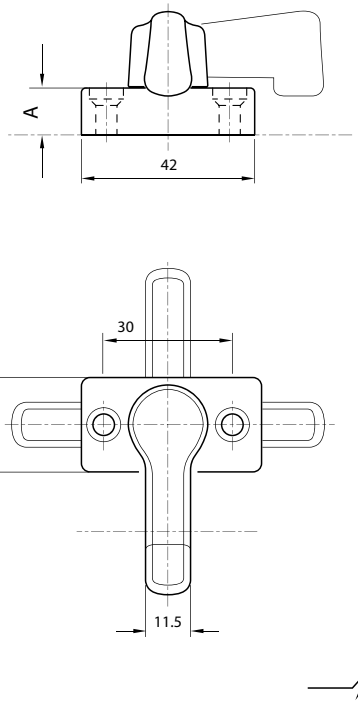

Door lock zinc die chrome plated	
A = 5 mm	5100-U830-IA
A = 8 mm	5100-U831-IA

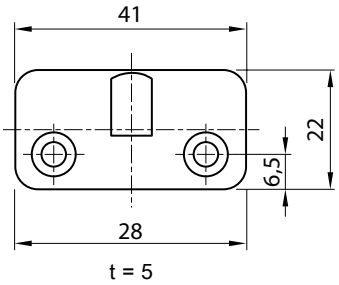

- suitable for all door connecting catches

Catch plate polyamide colour of your choice	
cream white	5100-4000-HA
grey	5100-4000-BD

© EMKA Beschlagteile GmbH & Co. KG • 2018 • www.emka.com

Bow-type handle

PROGRAM 1095

EMKA Beschlagteile

Bow-type handle without cover

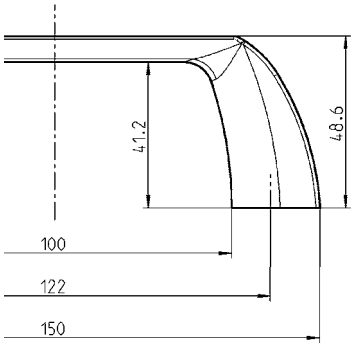

Bow-type handle with cover

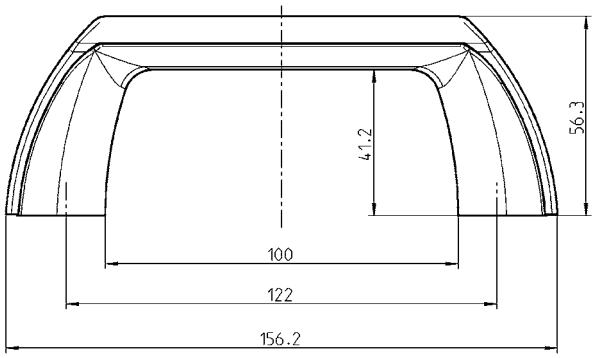

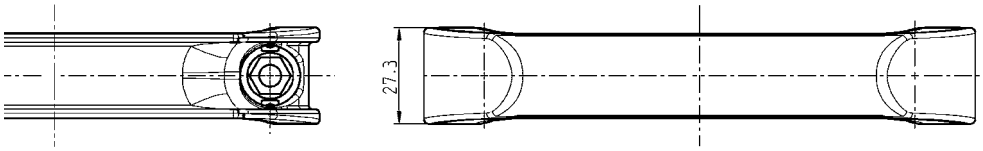

Bow-type handle polyamide GF black	
Handle for hexagon or cylinder screw M6 acc. to DIN 4017/1207	1095-35
Handle for countersunk screw M5 or rivet 4.8 mm dia	1095-36
Cover for bow-type handle polyamide GF black	
	1095-37

Bow-type handle

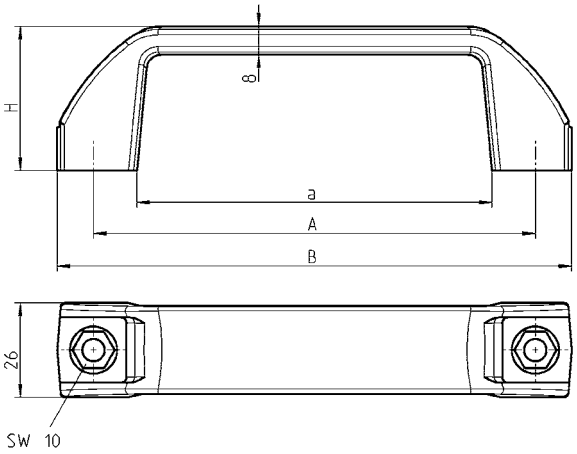

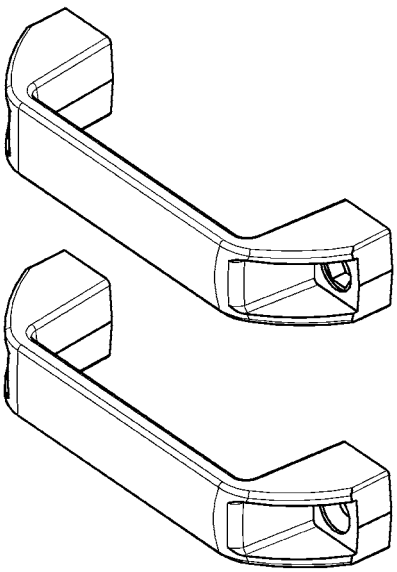

Version	a)	A	B	H
1	98	122	142	40
2	118,5	152	167	53,5

Bow-type handle polyamide GF black		
	Version 1	Version 2
Handle for hexagon or cylinder screw M6 acc. to DIN 4017/1207	1095-05	1095-19
Handle for countersunk screw M5 or rivet 4.8 mm dia	1095-06	–

small head = DIN ISO 2009, 2010, 7046-1, 7046-2, 7047

Fastening material is not included in delivery.

© EMKA Beschlagteile GmbH & Co. KG • 2018 • www.emka.com

Polyamide handle

PROGRAM 1095

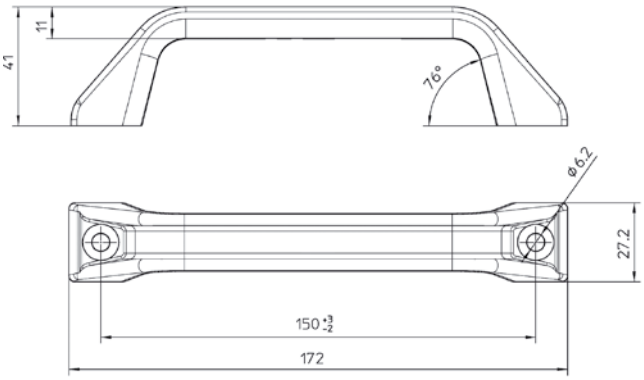

Handle polyamide black	
	1095-33
Cover polyamide black	
(2x per order)	1095-34

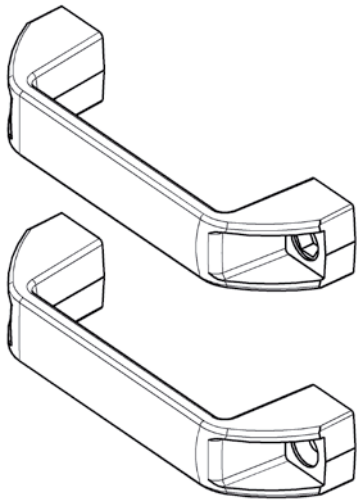

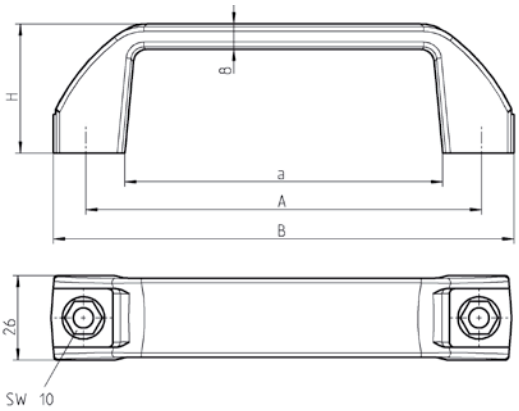

Version 1: a = 98; A = 122; B = 142; H = 40
Version 2: a = 118.5; A = 152; B = 167; H = 53.5

Handle polyamide GF black		
	Version 1	**Version 2**
Handle for hexagon or cylinder screw M6 acc. to DIN 4017/1207	1095-05	1095-19
Handle for countersunk screw M5 or rivet 4.8 mm dia	1095-06	–

small head = DIN ISO 2009, 2010, 7046-1, 7046-2, 7047

Fastening material is not included in delivery.

© EMKA Beschlagteile GmbH & Co. KG • 2018 • www.emka.com

Bow-type handles

PROGRAM 1095

EMKA Beschlagteile

EDELSTAHL Rostfrei STAINLESS STEEL

Version 1

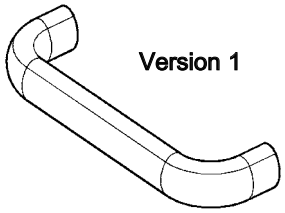

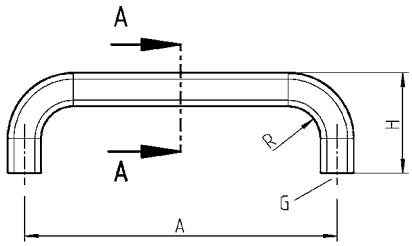

Version 2

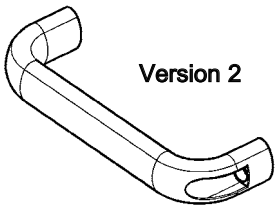

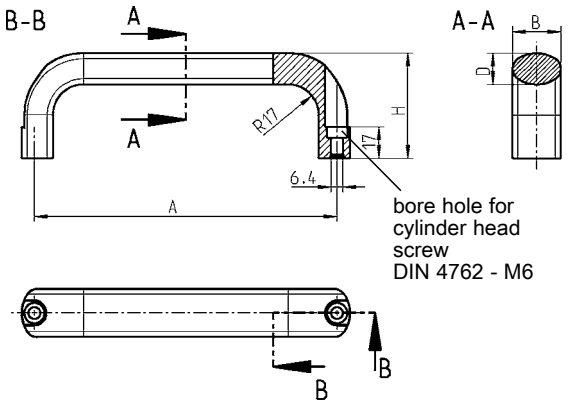

Version 1

Version 2

Bow-type handle, aluminium optionally raw, anodized, black plastic coated or stainless steel AISI								
Version 1								
A	**B**	**D**	**G**	**H**	**R**	**raw**	**anodized**	**black**
100	20	13	M6x10	47	13	1095-26-100KB	1095-26-100NA	1095-26-100AA
112	20	13	M6x10	49	13	1095-26-112KB	1095-26-112NA	1095-26-112AA
112	26	17	M8x12	53	17	1095-27-112KB	1095-27-112NA	1095-27-112AA
128	20	13	M6x10	51	13	1095-26-128KB	1095-26-128NA	1095-26-128AA
128	26	17	M8x12	55	17	1095-27-128KB	1095-27-128NA	1095-27-128AA
160	20	13	M6x10	51	13	1095-26-160KB	1095-26-160NA	1095-26-160AA
160	26	17	M8x12	57	17	1095-27-160KB	1095-27-160NA	1095-27-160AA
192	26	17	M8x12	57	17	1095-26-192KB	1095-26-192NA	1095-26-192AA
300	26	17	M8x12	57	17	1095-26-300KB	1095-26-300NA	1095-26-300AA
400	26	17	M8x12	57	17	1095-26-400KB	1095-26-400NA	1095-26-400AA
500	26	17	M8x12	57	17	1095-26-500KB	1095-26-500NA	1095-26-500AA
Version 1								
A	**B**	**D**	**G**	**H**	**R**			**AISI 304**
112	20	13	M6x10	49	13			1095-26-112PC
128	20	13	M6x10	51	13			1095-26-128PC

Bow-type handle, aluminium optionally raw, anodized, black plastic coated or stainless steel AISI								
Version 2								
A	**B**	**D**		**H**		**raw**	**anodized**	**black**
116	26	17		53		1095-28-116KB	1095-28-116NA	1095-28-116AA
132	26	17		55		1095-28-132KB	1095-28-132NA	1095-28-132AA
164	26	17		57		1095-28-164KB	1095-28-164NA	1095-28-164AA
196	26	17		57		1095-28-196KB	1095-28-196NA	1095-28-196AA
Version 2								
A	**B**	**D**		**H**				**AISI 316**
116	26	17		53				1095-28-116PH

Fastening material is not included in delivery.

© EMKA Beschlagteile GmbH & Co. KG • 2018 • www.emka.com

Chest handle
PROGRAM 1095

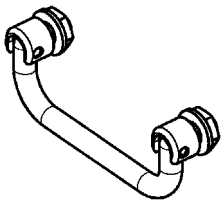

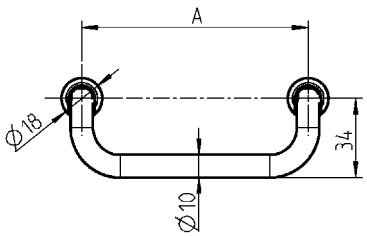

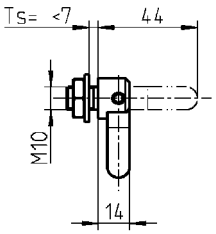

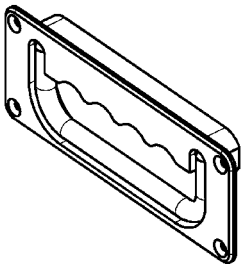

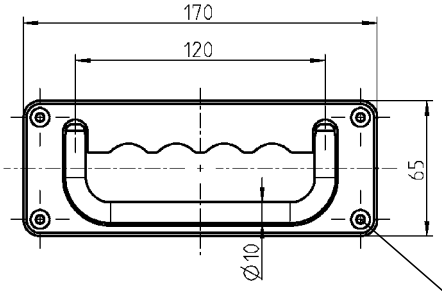

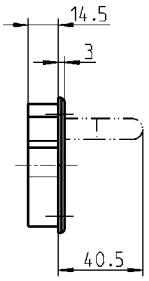

* Fixing hole for counter-sunk screw M4 DIN 7991

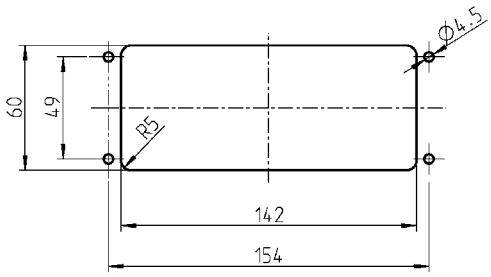

Cut out

* Fastening material is not included in delivery.

**** = on request**
– Handle length 100 instead of 120
– with spring reset of the handle when folded in

Chest handle m.s. chrome plated or stainl. st. AISI 303, fastening mat. AISI 303		
A	**m.s. chrome pl.**	**AISI 303**
100	1095-U32-100IA	1095-U32-100PF
120	1095-U32-120IA	1095-U32-120PF
180	1095-U32-180IA	1095-U32-180PF
Recessed chest handle m.s. chrome plated, tray zinc alloy black		
with locking mechanism of the handle both when folded in and out		1095-U32-AA **

© EMKA Beschlagteile GmbH & Co. KG • 2018 • www.emka.com

Pull
PROGRAM 1091

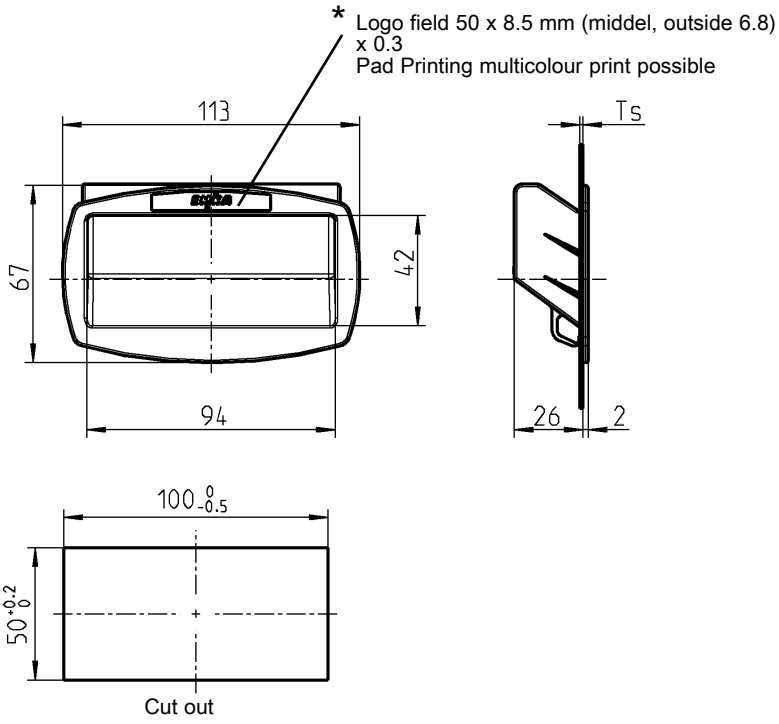

Pull Polyamide GF Black	
Ts 0.80 - 1.2 mm	1091-93
Ts 1.20 - 1.6 mm	1091-91
Ts 1.75 - 2.2 mm	1091-92

Assembly
The pull is fitted with clips that automatically snap in behind the door part.

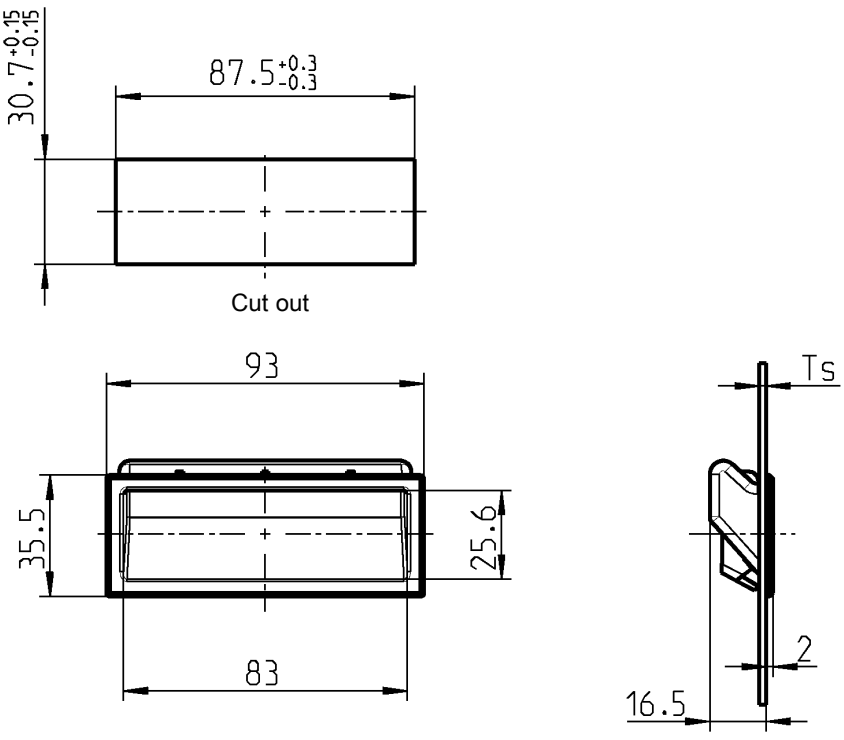

Assembly
The pull is fitted with clips that automatically snap in behind the door part.

Pull Polyamide GF Black	
Ts 0.8 - 1.2 mm	1091-103-01
Ts 1.2 - 1.6 mm	1091-103-02
Ts 1.75 - 2.2 mm	1091-103-03

On request:
– Pulls for further door thicknesses

© EMKA Beschlagteile GmbH & Co. KG • 2018 • www.emka.com

Pull
PROGRAM 1091

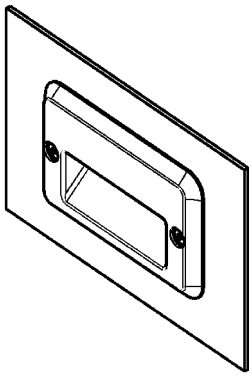

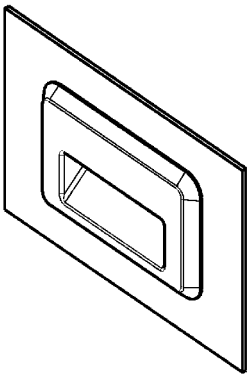

Version A

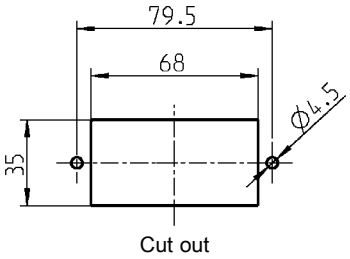

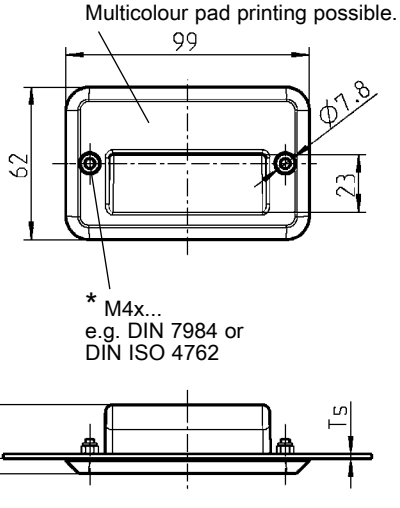

Version A

Version B

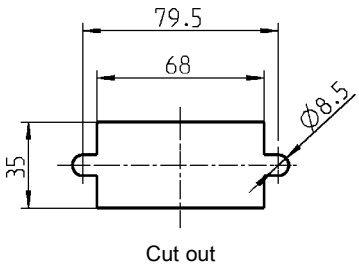

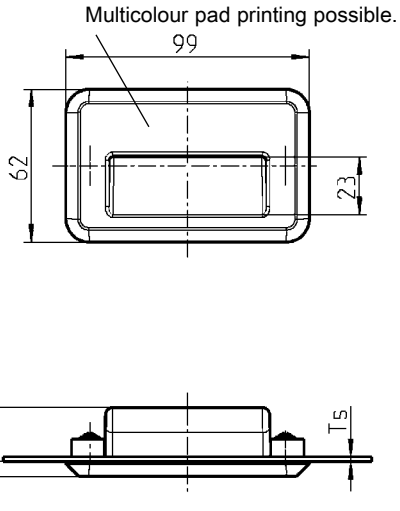

Version B

Pull polyamide GF black, with seal Version B clip polyamide GF black, fixing material m.s. zinc pl.			
Version A	IP 54	Ts 0.8 - 7	1091-105
Version B	IP65	Ts 0.8 - 3 **	1091-U144
Plug polyethylene black for version A			
(2 plugs are needed per pull)			1091-106

* not included in the scope of supply

****On request:**
– Pulls for further door thicknesses

© EMKA Beschlagteile GmbH & Co. KG • 2018 • www.emka.com

Handles
PROGRAMM 6040

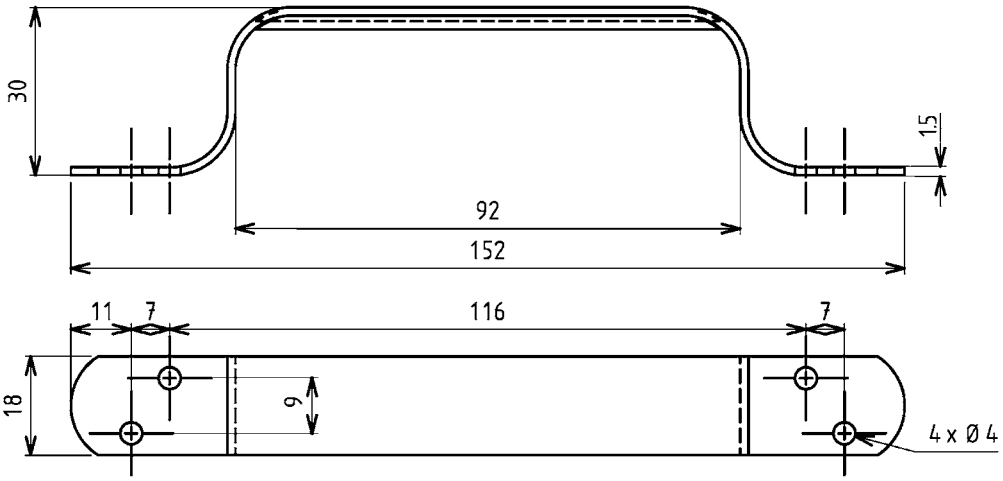

Bow-type handle	
Bare steel drilled	6040-15-KA
Bare steel undrilled	6040-15-01KA
Zinc plated steel DS plus Top Coat	6040-15-JQ
AISI 304 drilled	6040-15-PC

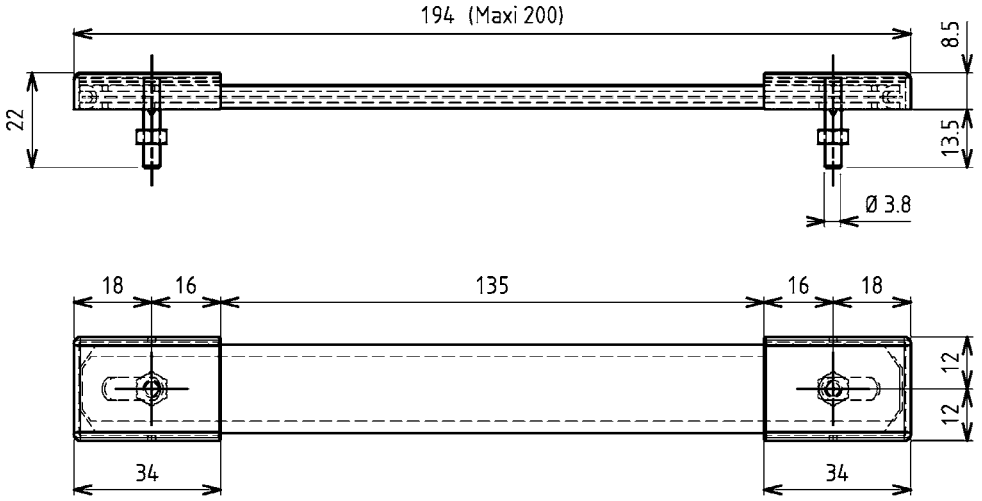

Case-handle	
Nickel plated steel with mounting holes	6040-U19-LA

© EMKA Beschlagteile GmbH & Co. KG • 2018 • www.emka.com

Handle

PROGRAM 6040

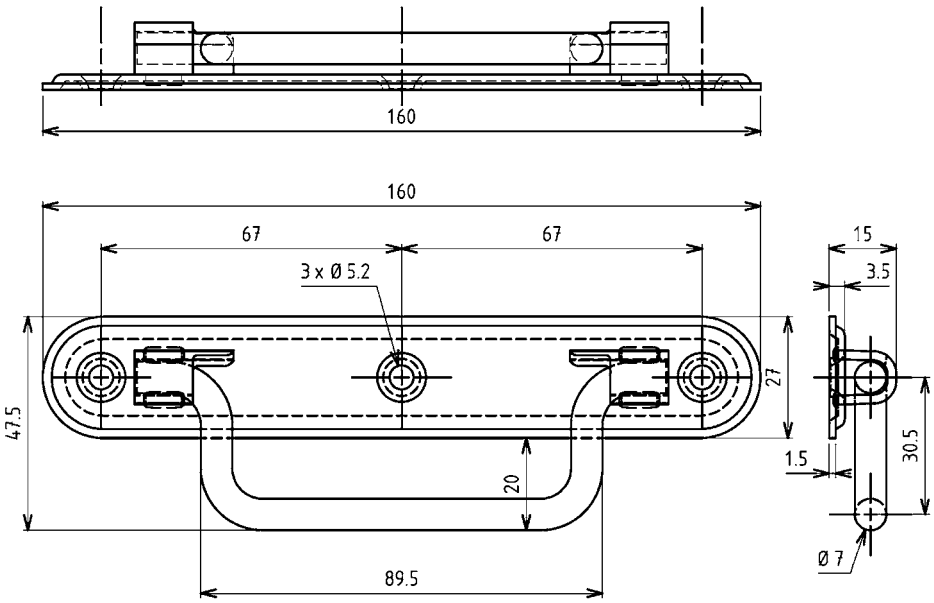

Chest handle	
	without piano wire torsion spring
Zinc plated steel DS plus Top Coat	6040-U94-JQ

© EMKA Beschlagteile GmbH & Co. KG • 2018 • www.emka.com

eCam
Electromechanical lock for cams
PROGRAM 3000

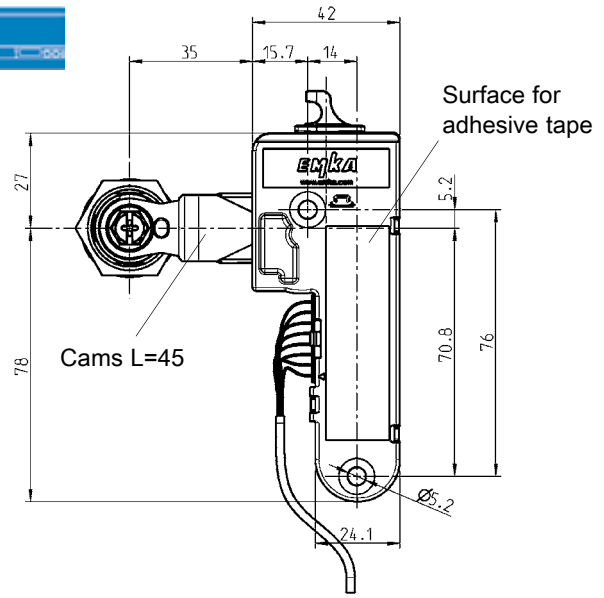

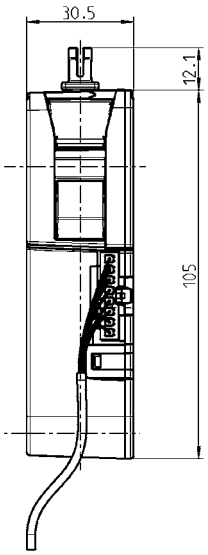

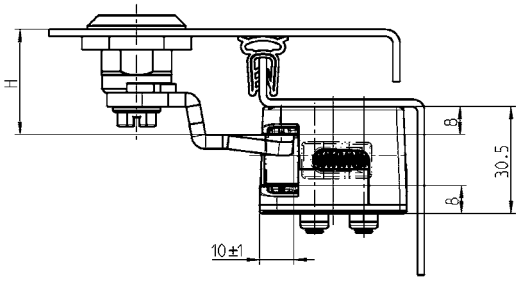

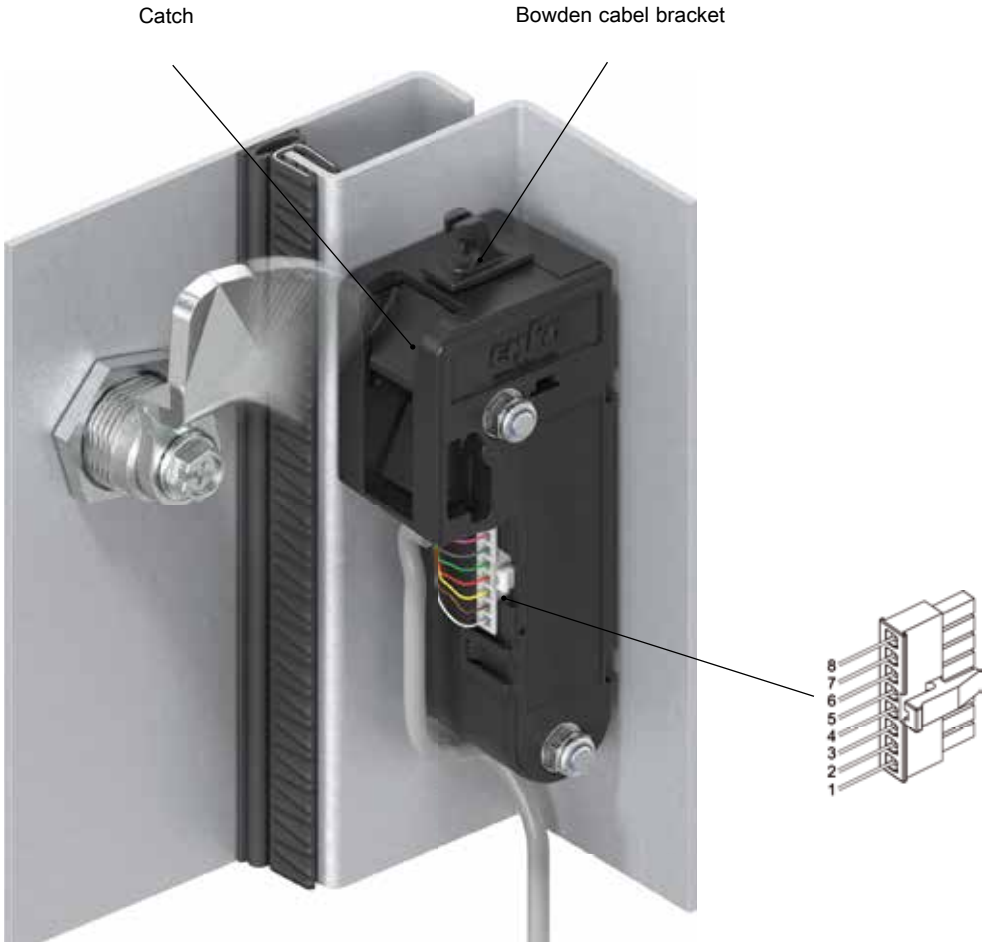

© EMKA Beschlagteile GmbH & Co. KG • 2018 • www.emka.com

The electromechanical lock for cams is used as concealed lock in different applications.

The following types are available:

- Basic = lock for cam without status feedback
- Basic Plus = lock for cam with status feedback
  Open collector output A1 indicates if cam is engaged in the catch
- Energy store = lock for cam with status feedback and automatic unlock in case of power failure
  Open collector output A1 indicates if cam is engaged in the catch

Features

- Wide supply voltage range from 9 ... 32 V
- Open collecten output for remote monitoring of lock status
- Emergency opening via bowden cable in case of power failure

Wiring information for version

PIN	Basic	Basic Plus	Energy store
1	—	Output A1	Output A1
2	—	—	—
3	Control input	Control input	Control input
4	V -	V -	V -
5	V +	V +	V - +
6	—	—	—
7	—	Door contact A1	Door contact A1
8	—	Door contact A2	Door contact A2

eCam **Housing, catch, cam disc, plunger polyamide GF;** **magnet; gear motor; with springs; installation and operating manual**	
Power supply:	**9 ... 32 VDC, max. 100 mA, stand-by 9 mA,** **Energy store 300 mA**
Output signal	**Open collector (max. 30 V, 50 mA)**
Basic = lock for cams without status feedback	3000-U304-01
Basic Plus = lock for cams with status feedback	3000-U304-02
Energy-store; lock for cams with status feedback	3000-U304-03
Connection cable 2 m with connector and open wire ends	
	3000-111
Adhesive tape for quick assembly	
	002834
Mounting kit for bowden cable	
	on request

© EMKA Beschlagteile GmbH & Co. KG • 2018 • www.emka.com

ePush-Lock
Electromechanical push locking system
PROGRAM 3000

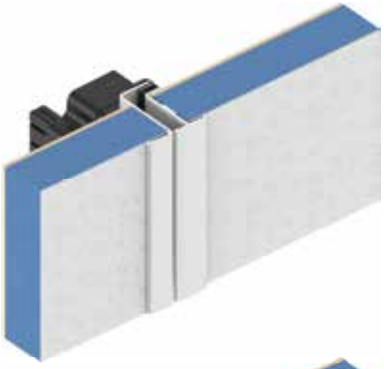

Locked and invisible from the outside

Closed

Opening

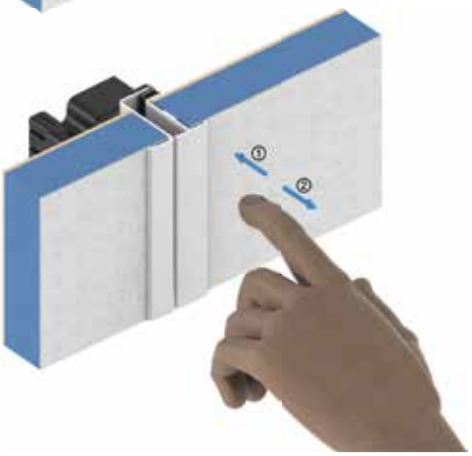

Open by pushing

Open

Closing

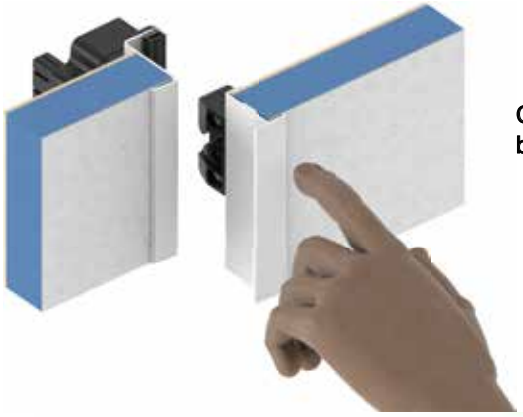

Close by pushing

Closed

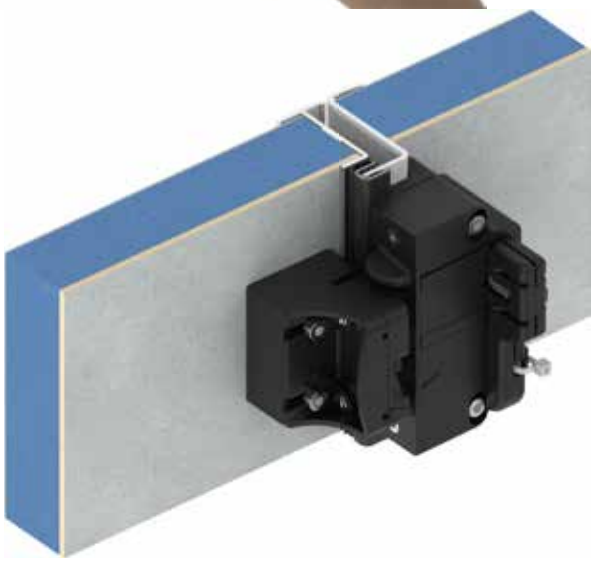

© EMKA Beschlagteile GmbH & Co. KG • 2018 • www.emka.com

The electromechanical push lock is used as an invisible lock from the outside in different applications.

NEW

The following types are going to be available:

- Unlocking by central locking
- Unlocking by switch or button

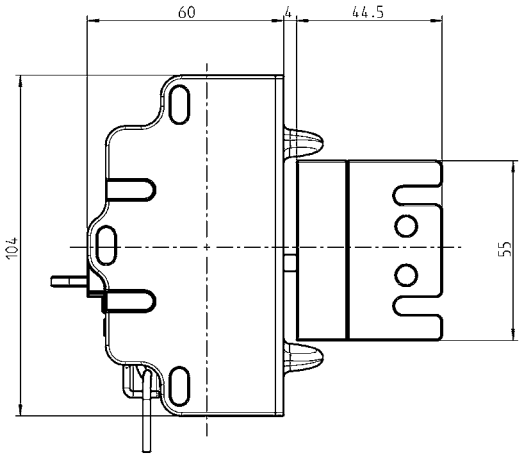

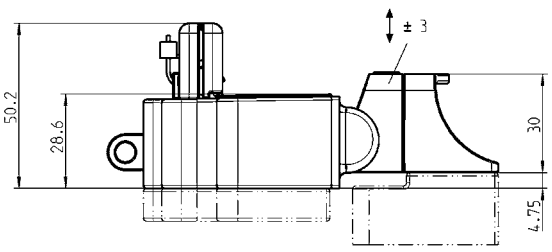

Patent submitted

ePush-Lock housing, catch and cap polyamide GF black; locking pin m.s. zink plated; mounting and operating instructions	
Lock for central locking	on request
Lock for switch / button	on request
Connection cable 2 m with connector and open wire ends	
	3000-111

© EMKA Beschlagteile GmbH & Co. KG • 2018 • www.emka.com

Single point latch with emergency opening

PROGRAM 3000

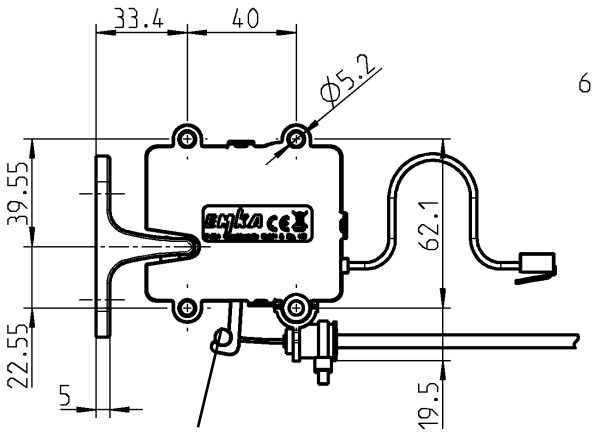

Lever for mechanic unlock, e.g. bowden cable

Single point latch with catch

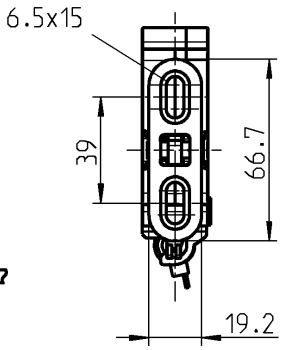

Single point latch with locking bolt

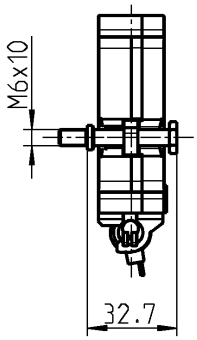

Single point latch with locking bolt

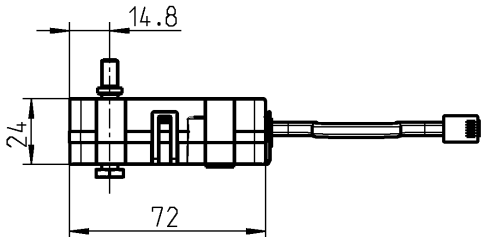

Single point latch with catch

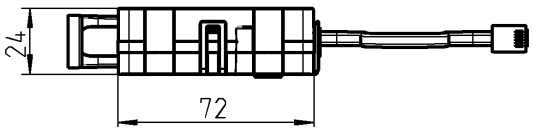

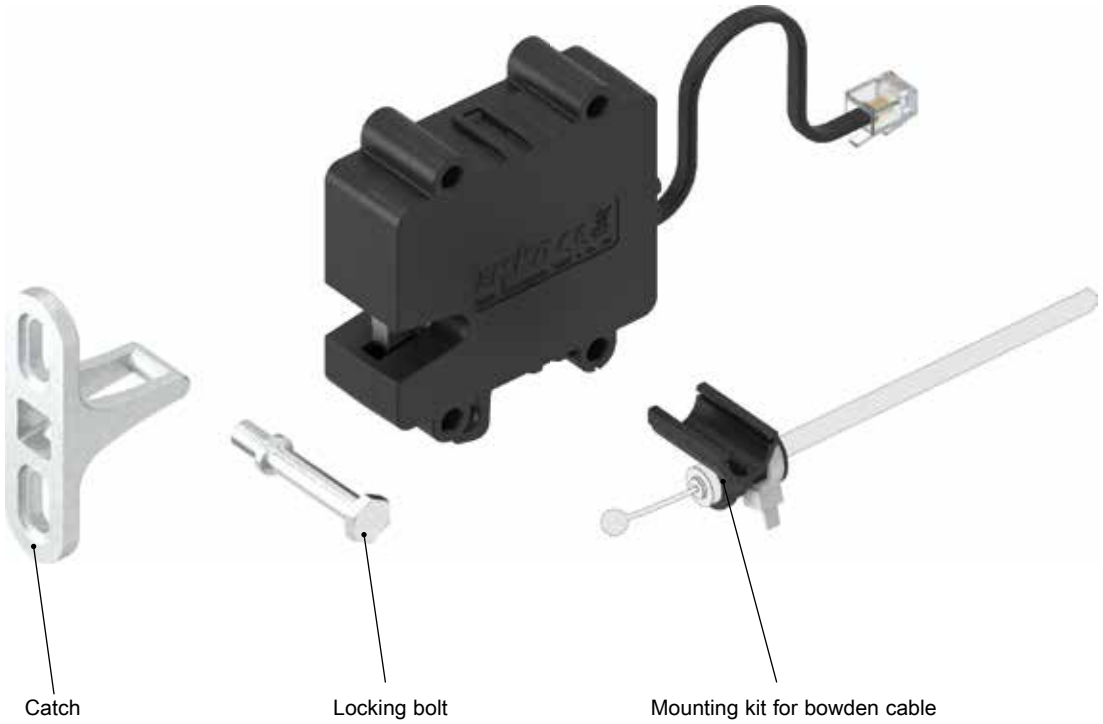

Catch

Locking bolt

Mounting kit for bowden cable

© EMKA Beschlagteile GmbH & Co. KG • 2018 • www.emka.com

The single point latch is used in various applications as concealed lock.

The following types are available:

- Basic = latch is opened by switching on the power supply and locked as soon as the door is closed again
- Basic delayed Re-Lock = latch is opened by switching on the power supply and remains in the position 'open' as long as the power supply is applied
- Energy store = latch opens when switching off of the power supply (alternative to magnetic locks)
- Battery backup = latch is permanently powered and opened via electrical pulse; protection class IP 56

Features

- Wide supply voltage range from 9 ... 32 V
- Potential-free switch for remote monitoring of latch status
- Emergency opening via bowden cable in case of power failure

Connection possible to
Locking Unit 3000-U32-x or
Access Unit 3000-U47-x;
adapter cable optional

- ATEX / UL-Ex approval in preparation

Wiring information for

RJ45 plug front view	PIN	Basic Basic delayed Re-Lock Energy store	Battery backup	wire colours
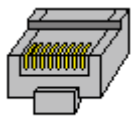 87654321	2	—	V -	white
	3	contact	contact	black
	4	V -	Release -	- red
	5	V - +	Release - +	- green
	6	contact	contact	yellow
	7	—	V - +	blue

Single point lath with integrated status contact, housing polyamide GF black; ratch and pawl steel lubricant varnished; cable 150 mm with RJ45 plug; with mounting and operating instructions Power supply: 9 ... 32 VDC, 100 mA Contact switching power: max. 30 VDC, min. 1 mA, max. 100 mA	
Basic	3000-U301-01
Basic delayed Re-Lock	3000-U301-02
Energy store; automatic unlock in case of power failure	3000-U301-03
Battery backup, IP56	3000-U301-04
Catch material of your choice	
AISI 316	3000-78-PH
zinc die zinc plated	3000-78-01KA
Striker bolt m.s. zinc plated	
	3000-102-JB
Mounting kit for bowden cable polyamide GF black; washer m.s. zinc plated and cable tie	
	3000-U303

On request:
– Mounting plate
– Bowden cable

© EMKA Beschlagteile GmbH & Co. KG • 2018 • www.emka.com

Actuator
PROGRAM 5225

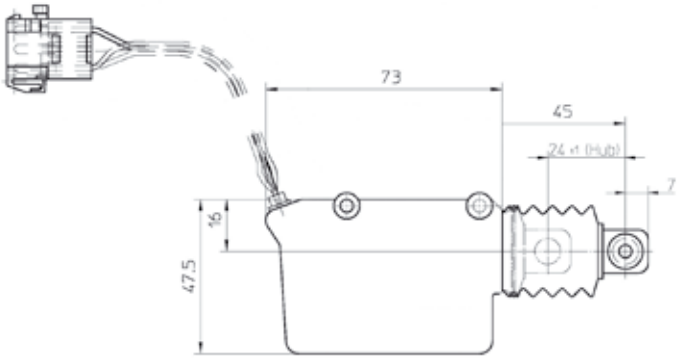

Execution 5225-U1 and U3, max. 1 second to energize

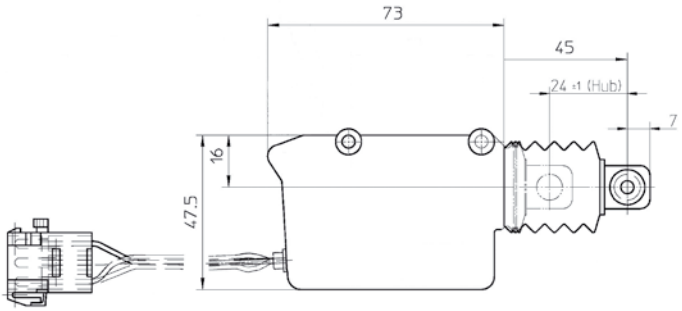

Several versions available:
Tension and motor pressure with spring return

Actuator electric locking and unlocking e.g. for central locking	
12V with microswitch, cable length 400 mm with 6-pin. AMP connector	5225-U1
24V with microswitch, cable length 400 mm with 6-pin. AMP connector	5225-U3
Further types and cable lengths	on request

- Motor for central locking
- Tension and pressure motor
- with or without microswitch
- multiple connectors
- Cable lengths and versions on request

© EMKA Beschlagteile GmbH & Co. KG • 2018 • www.emka.com

Notes

© EMKA Beschlagteile GmbH & Co. KG • 2018 • www.emka.com

EMKA
Beschlagteile

1 Latches and handles

2 Hinges

3 Gasketings

4 Accessories

Hinge
PROGRAMM 3060, 1056

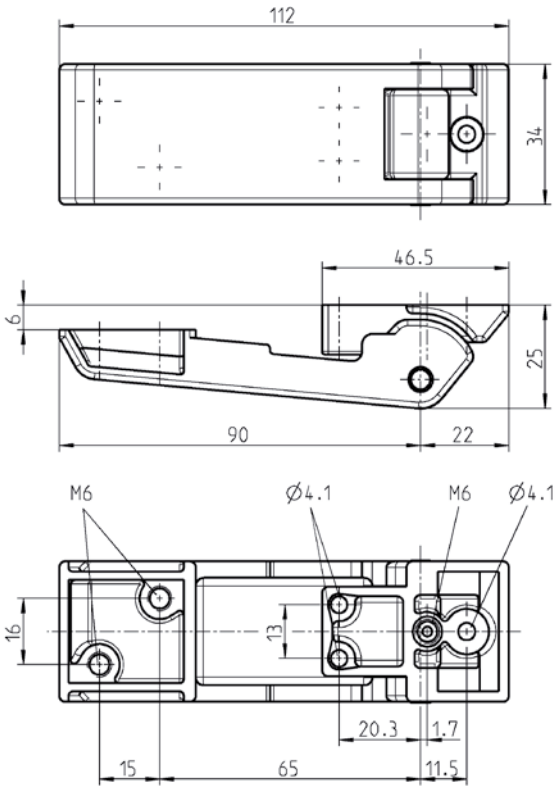

Hinge zinc die powder coat aluminum, RAL 9006; hinge pin ms zinc plated	
	3060-U380-BK

270° screw-on hinge

EDELSTAHL Rostfrei STAINLESS STEEL

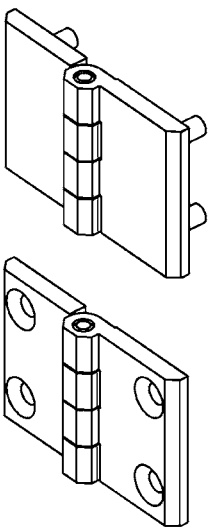

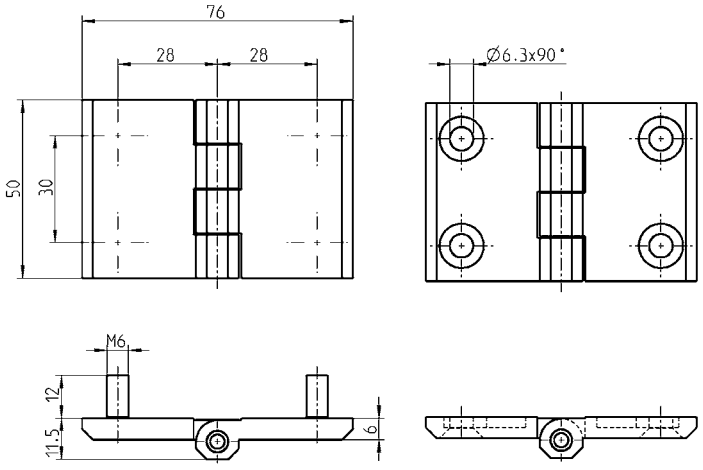

Screw-on hinge zinc die or stainl. steel, threaded studs M6 stainl. steel			
	Pin	threaded pin M6	for countersunk screw M6 (2D-nut possible)
Zinc die chrome plated	Stainl. steel	1056-U15	1056-U17
Zinc die black powder-coated	Stainl. steel	1056-U16	1056-U18
AISI 316	Stainl. steel	–	1056-U17-PH

© EMKA Beschlagteile GmbH & Co. KG • 2018 • www.emka.com

180° Stainless steel screw-on hinge

PROGRAM 1056

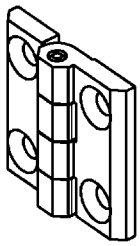

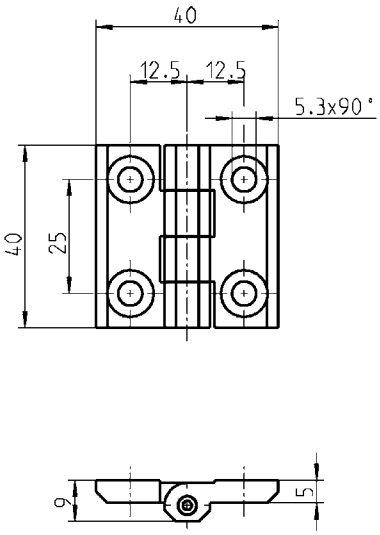

Screw-on hinge AISI 316 for countersunk screw M5	
	1056-U5-PH

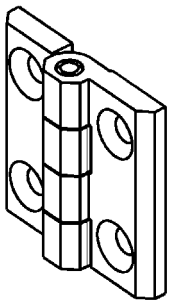

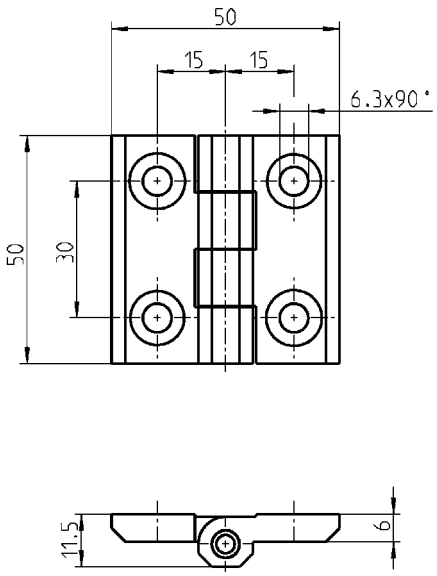

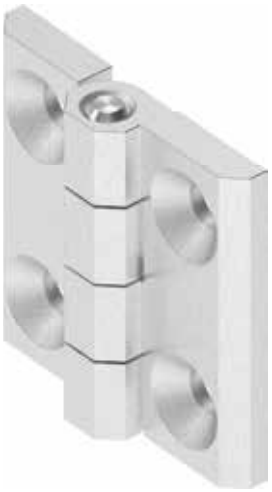

Screw-on hinge AISI 316 for countersunk screw M6	
	1056-U9-PH

© EMKA Beschlagteile GmbH & Co. KG • 2018 • www.emka.com

180° Stainless steel screw-on hinge

PROGRAM 1056

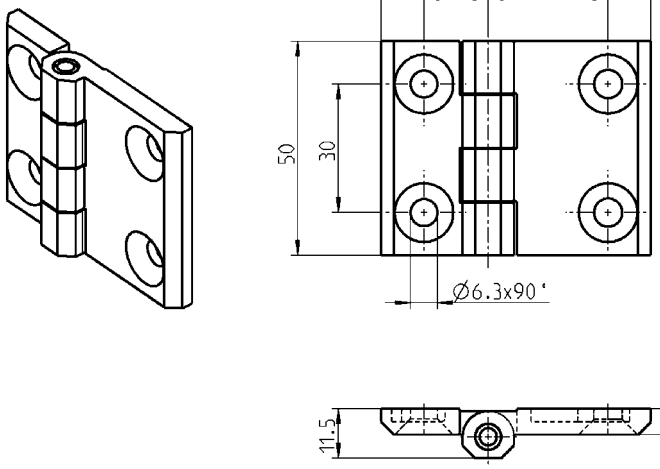

Screw-on hinge AISI 316, hinge pin stainless steel, for countersunk screw M6	
	1056-U59-PH

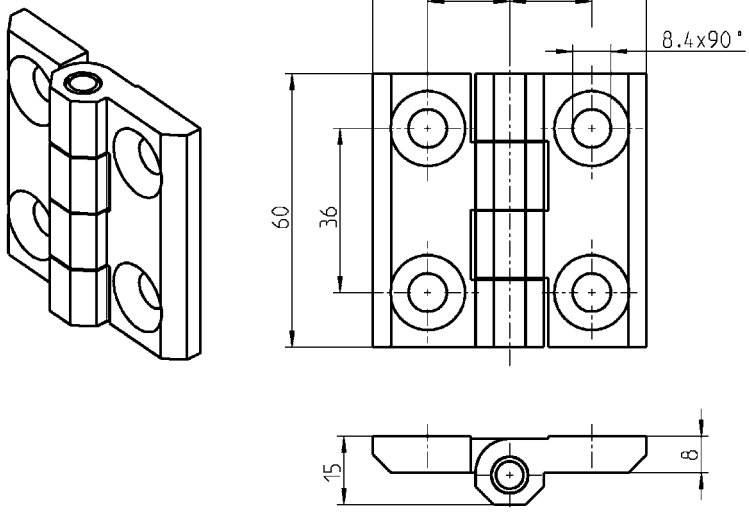

Screw-on hinge AISI 316 for countersunk screw M8	
	1056-U13-PH

© EMKA Beschlagteile GmbH & Co. KG • 2018 • www.emka.com

90° Concealed hinge

PROGRAM 1046

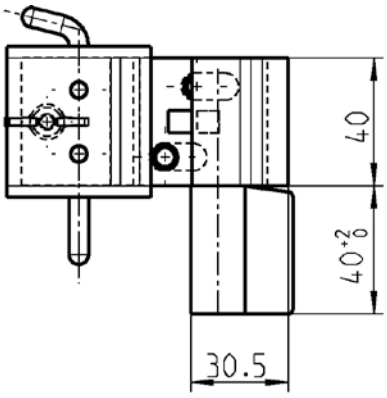

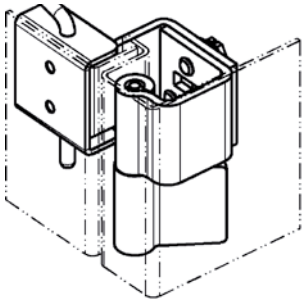

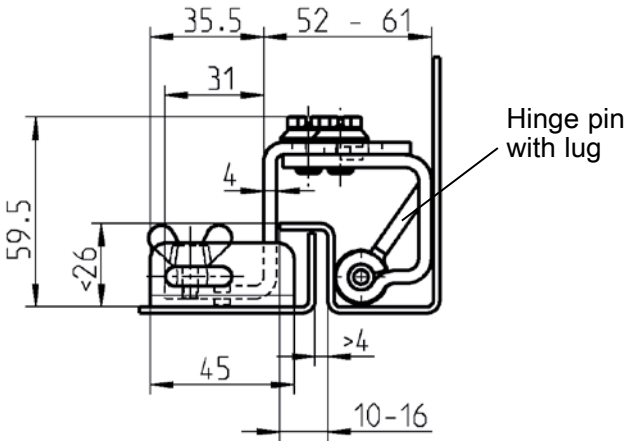

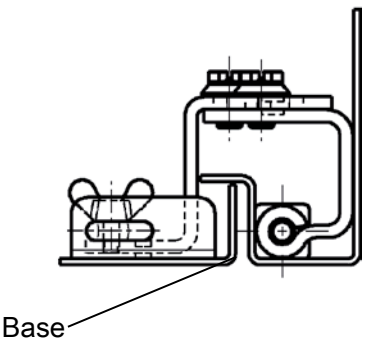

Concealed hinge m.s. zinc pl., weld-on parts m.s. raw	
Hinge pin with lug	1046-U2
Hinge pin with square (17x50)	1046-U4

© EMKA Beschlagteile GmbH & Co. KG • 2018 • www.emka.com

180° Screw-on hinge

PROGRAM 1039, 1055

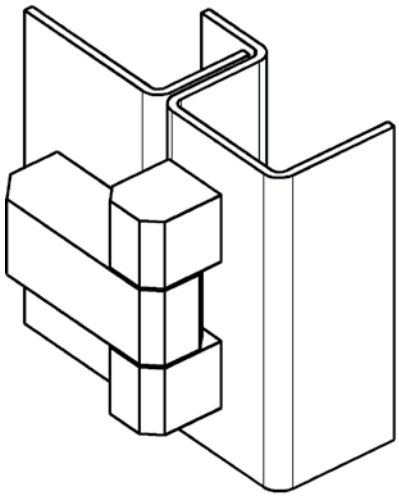

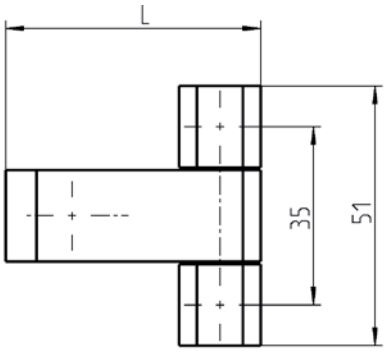

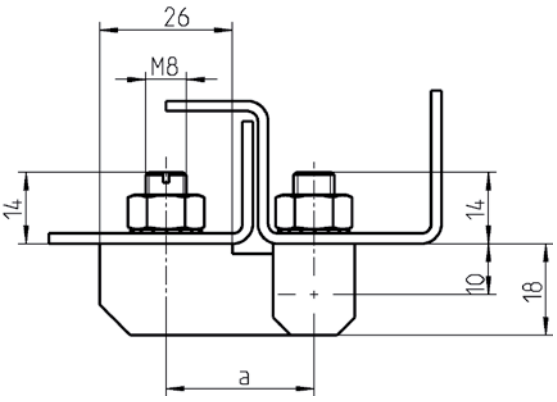

Screw-on hinge m.s. zinc pl., pin and washer brass nickel pl. or stainl. steel				
L	**a**	**m.s.**	**AISI 303**	**AISI 316**
50	29	1039-U10	1039-U18	1039-U25
61	40	1039-U11	–	–

© EMKA Beschlagteile GmbH & Co. KG • 2018 • www.emka.com

180° Screw-on hinge

PROGRAM 1054

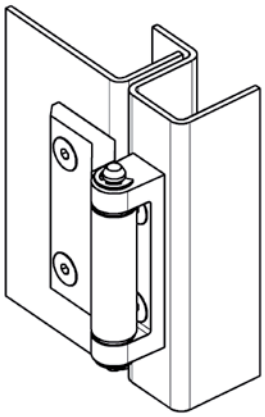

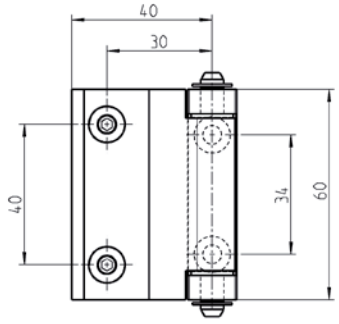

* Countersunk screw
small head M5x…

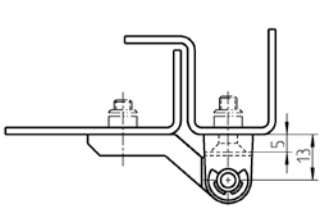

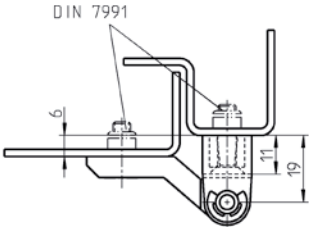

Screw-on hinge zinc die, pin and washer m.s. zinc plated and bush polyamide		
	straight	**6 mm higher**
chrome pl.	1054-U4	1054-U27
black powder-coated	1054-U5	1054-U28
raw	1054-U22**	1054-U29**
** = Minimum order quantity 1000 pcs.		
Screw-on hinge AISI 316 and bushes polyamide		
	1054-U5-PH	-

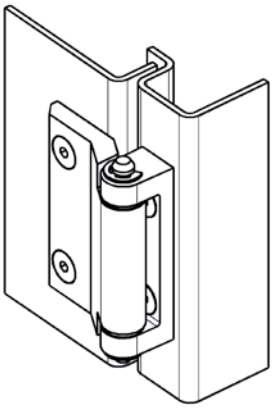

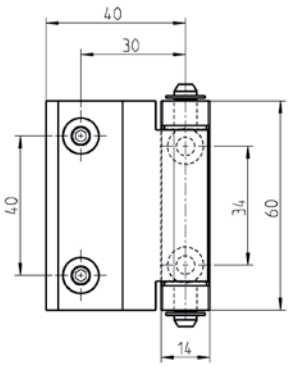

* Countersunk screw
small head M5x…

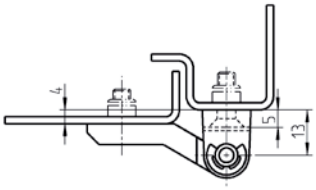

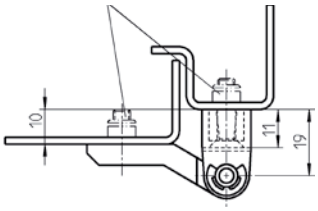

Screw-on hinge zinc die, pin and washer m.s. zinc plated and bush polyamide		
	4 mm higher	**10 mm higher**
chrome pl.	1054-U7	1054-U19
black powder-coated	1054-U10	1054-U20
raw	1054-U18**	1054-U21**
** = Minimum order quantity 1000 pcs.		

* not included in
the scope of supply

small head = DIN ISO 2009, 2010, 7046-1, 7046-2, 7047

© EMKA Beschlagteile GmbH & Co. KG • 2018 • www.emka.com

180° 2D-Screw-on hinge

PROGRAM 1054

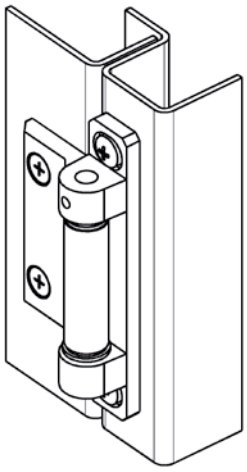

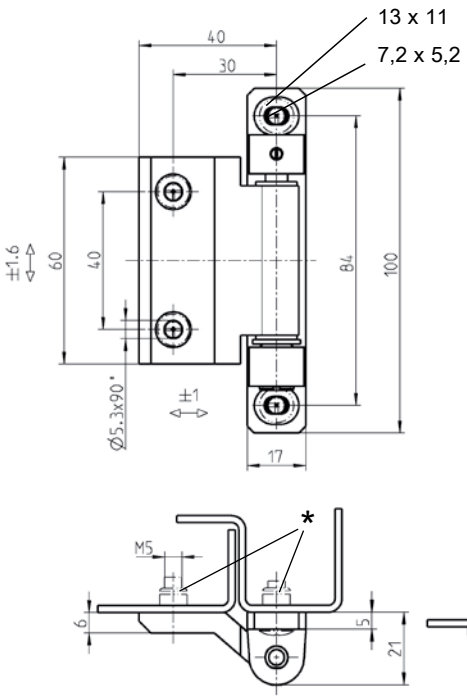

Version A Version B

RH or LH version by turning around the door part

Hinge pin is self-gripping

Counterbores for small head countersunk screw M5

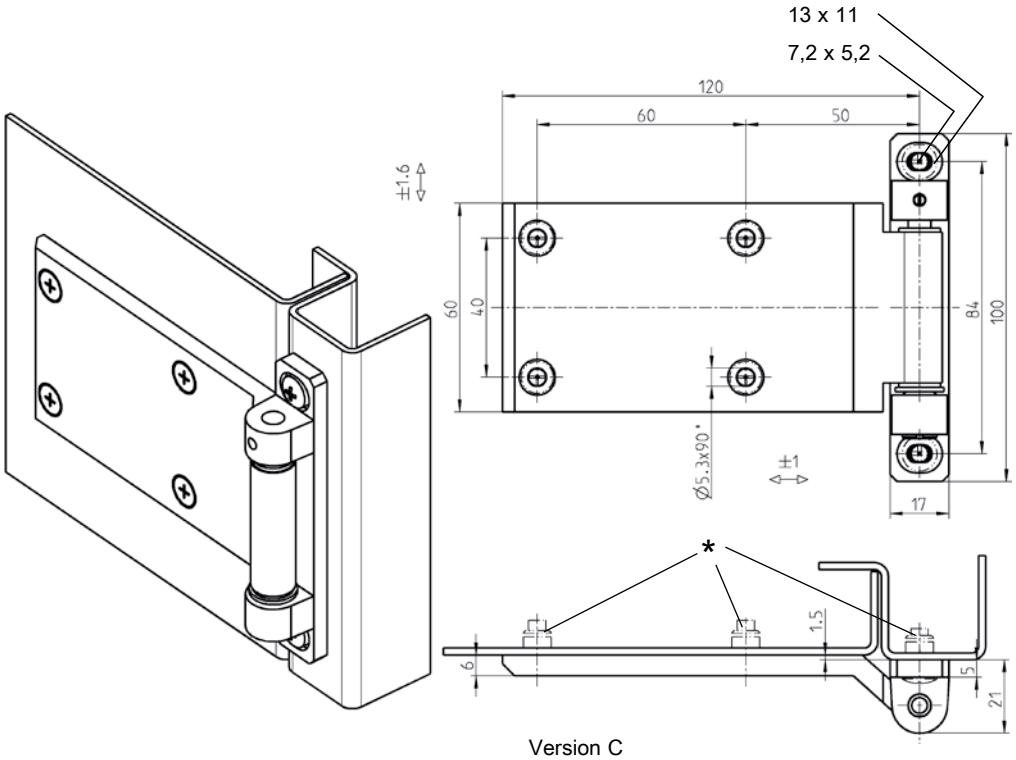

Version C

2D-screw-on hinge zinc die, axle brass nickel plated; washer m.s. zinc plated and bush polyamide			
	Version A	**Version B**	**Version C**
black powder-coated	1054-U33-01	1054-U34-01	1054-U35-01
raw	1054-U33-02	1054-U34-02	1054-U35-02

* not included in the scope of supply

small head = DIN ISO 2009, 2010, 7046-1, 7046-2, 7047

© EMKA Beschlagteile GmbH & Co. KG • 2018 • www.emka.com

180° 3D-Screw-on hinge

PROGRAM 1054

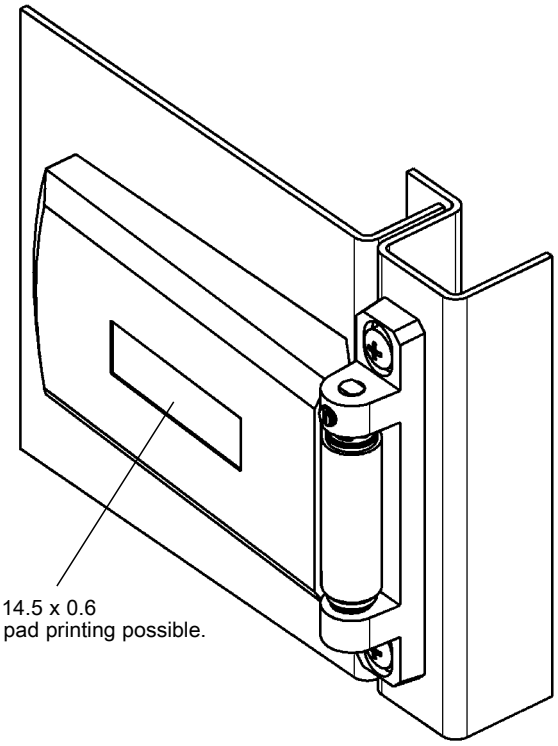

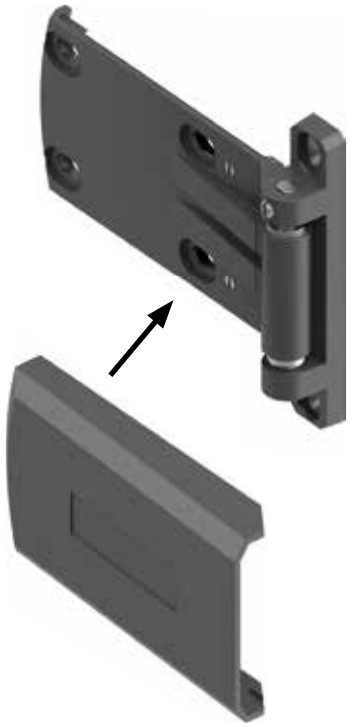

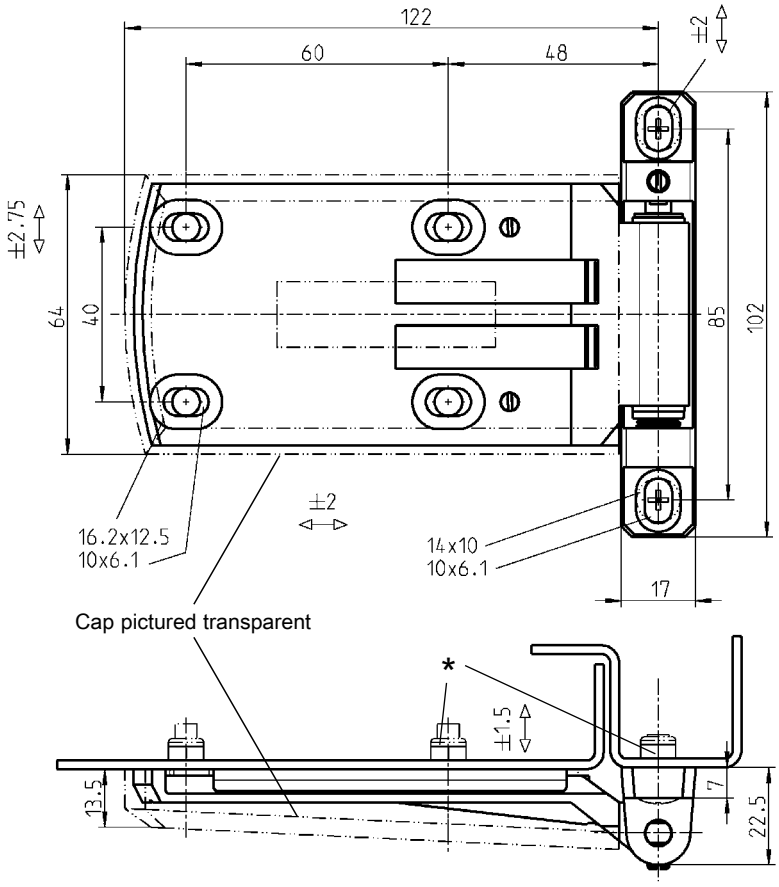

3D-screw-on hinge zinc die black p.c., axle stainless steel, pin and washer steel zinc pl., cap and bush polyamide black	
RH version	1054-U36-RE
Left hand version	1054-U36-LI

* not included in the scope of supply

RH or LH version by turning around the door part

© EMKA Beschlagteile GmbH & Co. KG • 2018 • www.emka.com

HVACR Compression Latch-Hinge large

PROGRAM 1091

Compression Latch-Hinge locked

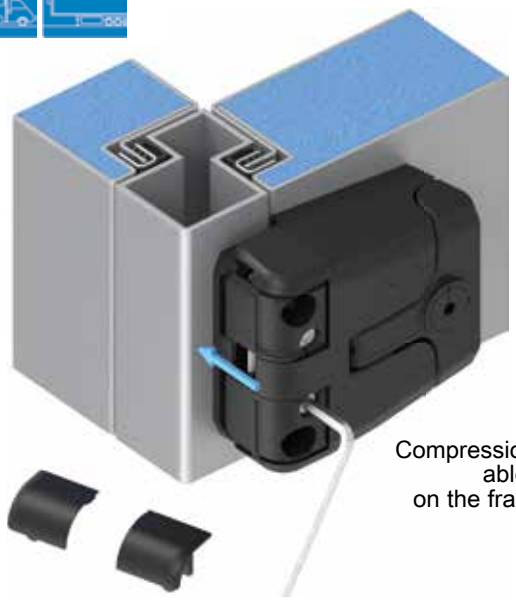

Compression adjust-
able
on the frame part

Latch-Hinge with pressure relief,
handle unlocked

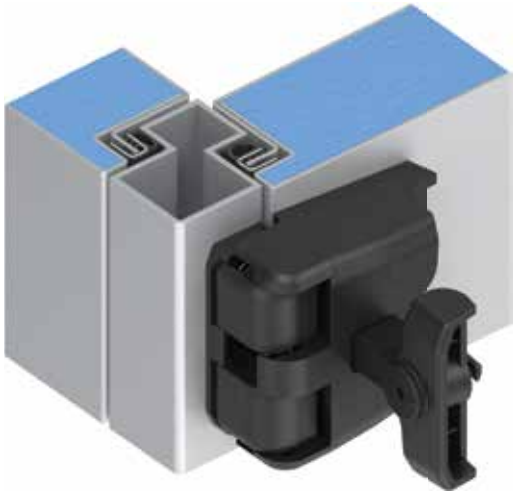

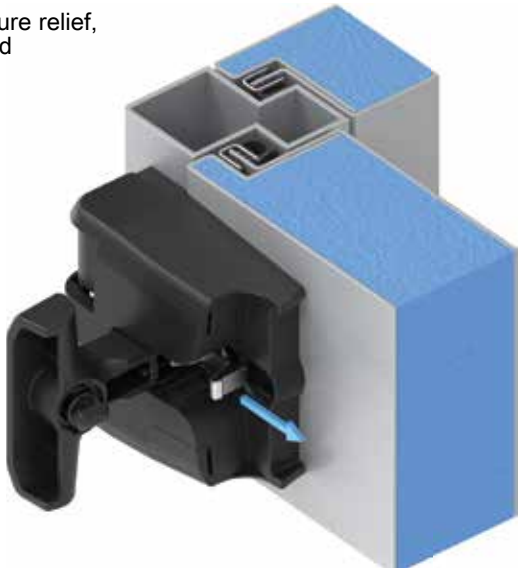

Latch-Hinge open

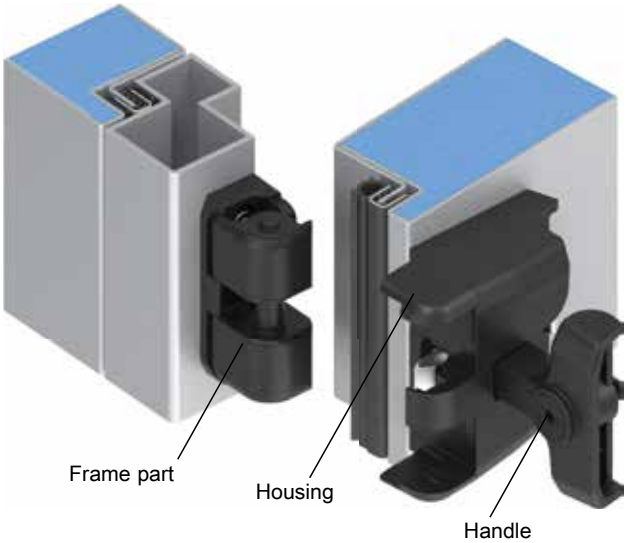

Hinge
180° opening angle

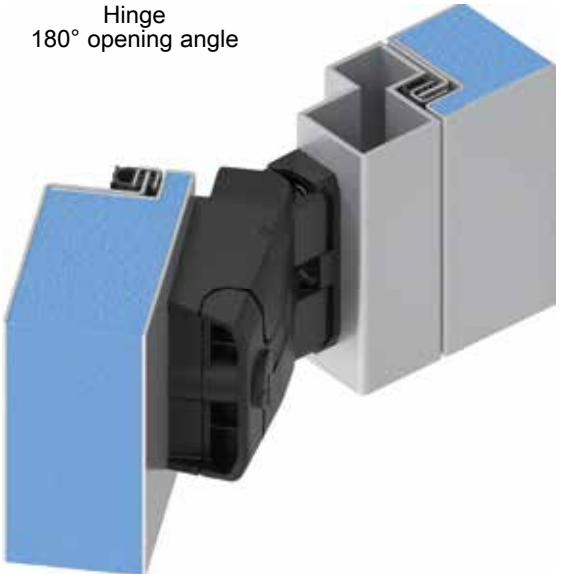

© EMKA Beschlagteile GmbH & Co. KG • 2018 • www.emka.com

Product benefits

- When the door is closed, the latch is adjustable (3 mm) to achieve perfect alignment
- Compression (5 mm) with low opening & closing force
- Door or panel can be removed by unlatching the handles on both sides
- 3D Adjustable
- Latch-Hinge can be mounted as one piece with the door in place
- Right or left hinged
- Hinge 180° opening angle
- Available with or without pressure relief
- Patent submitted
- ATEX compliant explosion protection version available on request

NEW

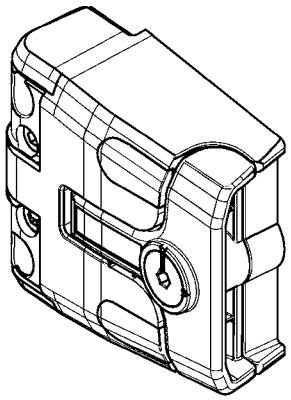

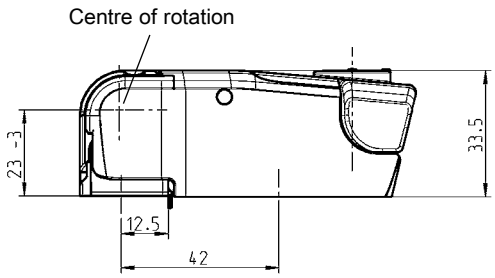

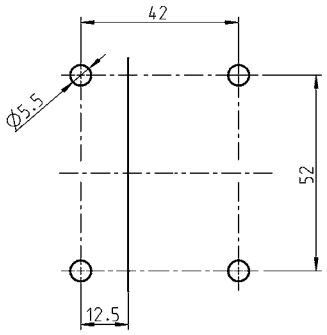

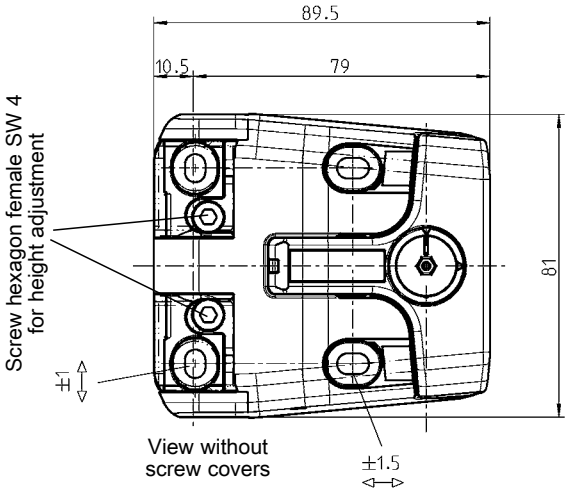

HVACR Compression Latch-Hinge large: housing, handle, screw covers polyamide GF black; top and bottom frame part zinc die black powder-coated; latch zinc die nickel-plated; pin AISI 303; screw for height adjustment, washer and nut m.s. zinc-plated; with spring			
① insert hexagon female BS 4 polyamide GF black			
② Round cylinder Series 9000 zinc die with stainless steel cap and dust cap. Each round cylinder has two silver steel nickel plated reversible keys at a ring.			
	① Insert	**② Keyed 9081**	**Keyed different**
without pressure relief	1091-U146	on request	on request
with pressure relief	1091-U147	on request	on request

© EMKA Beschlagteile GmbH & Co. KG • 2018 • www.emka.com

HVACR Compression Latch-Hinge small

PROGRAM 1091

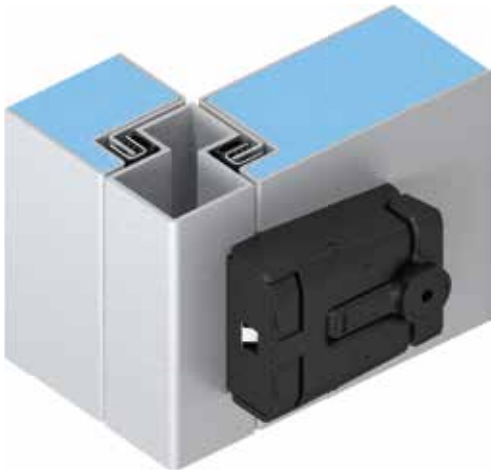

Compression Latch-Hinge locked

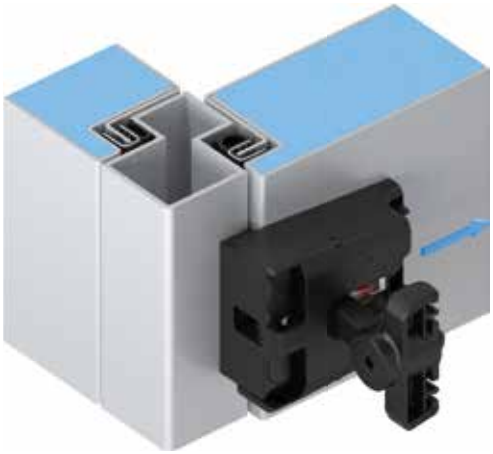

Latch-Hinge with pressure relief,
handle unlocked

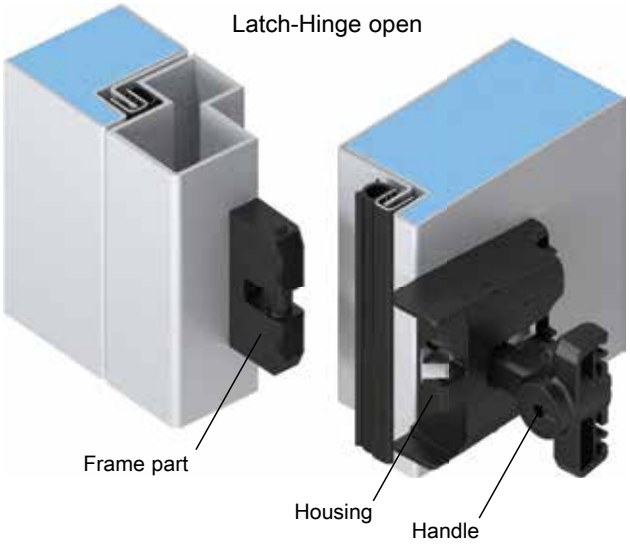

Latch-Hinge open

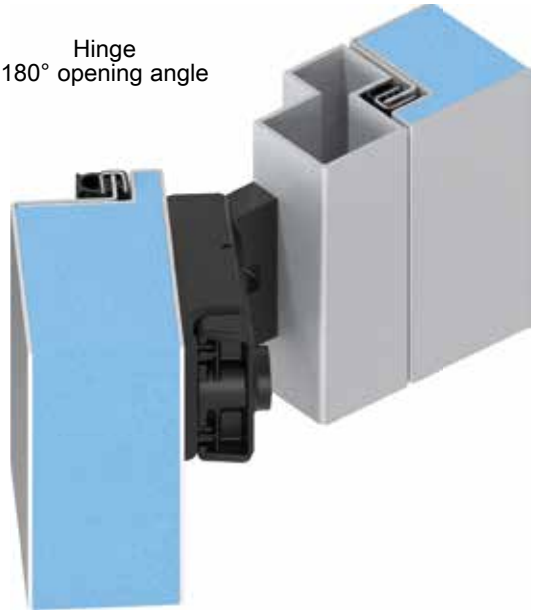

Hinge
180° opening angle

© EMKA Beschlagteile GmbH & Co. KG • 2018 • www.emka.com

Product benefits

- The favorable pivot point of the handle allows for low actuation forces a seal compression of 5 mm
- Door or panel can be removed by unlatching the handles on both sides
- 2D Adjustable (tolerance compensation)
- Latch-Hinge can be mounted as one piece with the door in place
- Right or left hinged
- Hinge
  180° opening angle
- Available with or without pressure relief
- Patent submitted
- ATEX compliant explosion protection version available on request

NEW

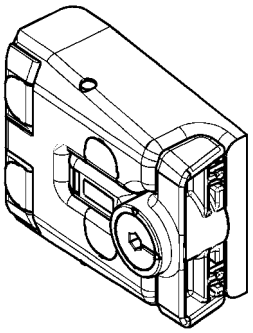

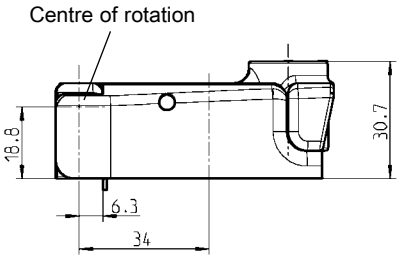

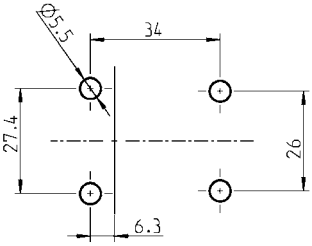

Frame part Housing

Cut out

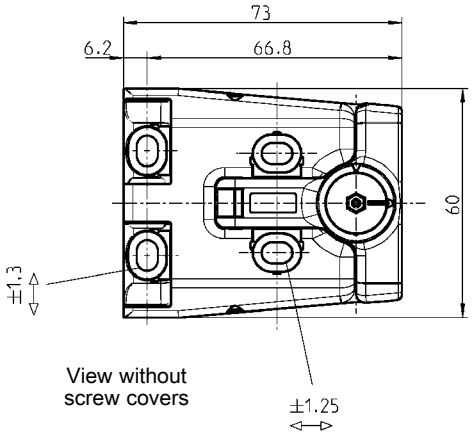

View without screw covers

HVACR Compression Latch-Hinge small: housing, handle, frame part polyamide GF black; screw covers polyamide black; latch zinc die nickel-plated; pin AISI 303; with spring			
① insert hexagon female BS 4 polyamide GF black			
② Round cylinder Series 9000 zinc die with stainless steel cap and dust cap. Each round cylinder has two silver steel nickel plated reversible keys at a ring.			
	① Insert	② Keyed 9081	Keyed different
without pressure relief	1091-U169	on request	on request
with pressure relief	1091-U168	on request	on request

© EMKA Beschlagteile GmbH & Co. KG • 2018 • www.emka.com

180° stainless steel screw-on hinge adjustable

PROGRAM 1054

EMKA Beschlagteile

EDELSTAHL Rostfrei STAINLESS STEEL

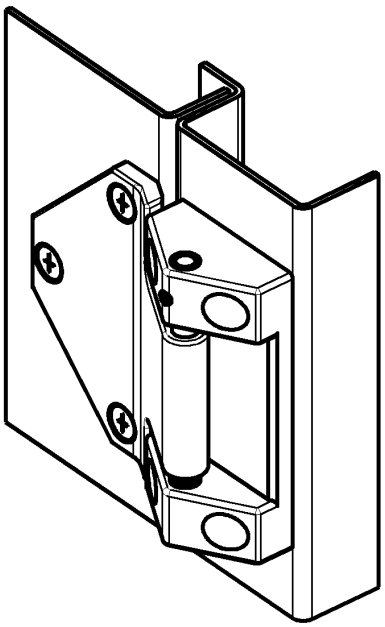

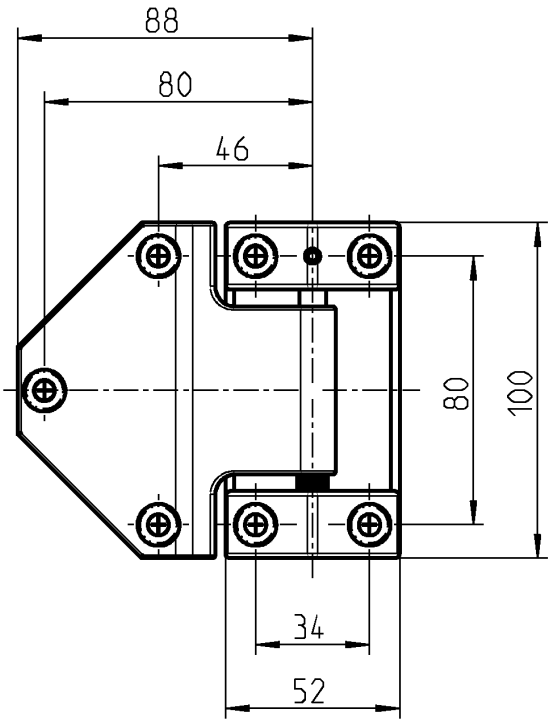

Height adjustment ±4 mm

RH or LH version by turning around the door part

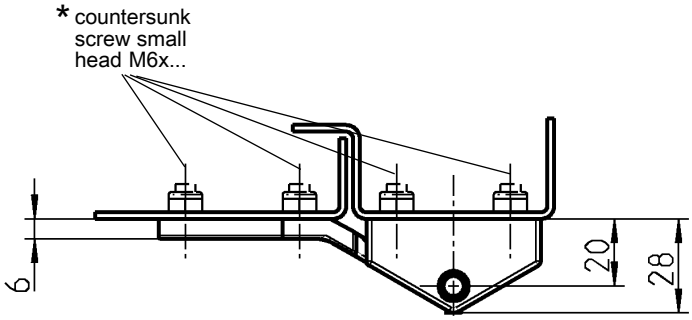

* not included in the scope of supply

Screw-on hinge adjustable stainless steel1.4571, washer and hinge pin stainless steel	
	1054-U39

small head = DIN ISO 2009, 2010, 7046-1, 7046-2, 7047

© EMKA Beschlagteile GmbH & Co. KG • 2018 • www.emka.com

180° Gear hinge
PROGRAMM 1007

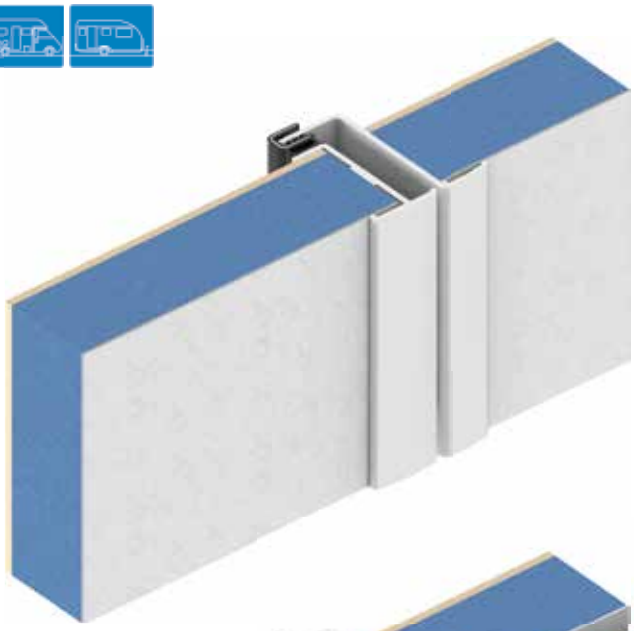

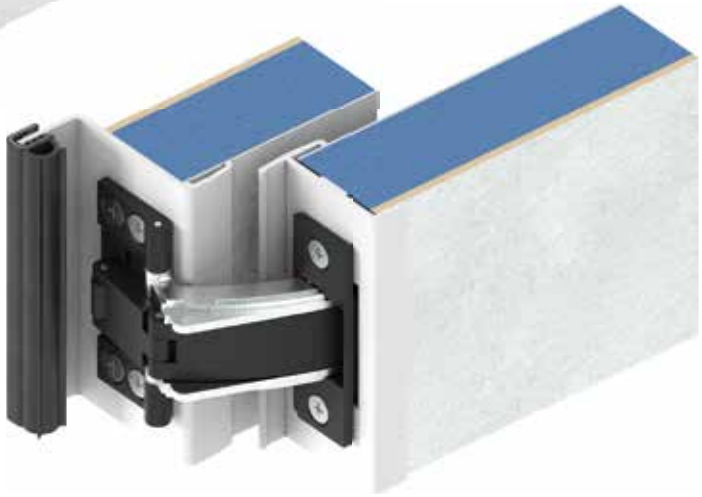

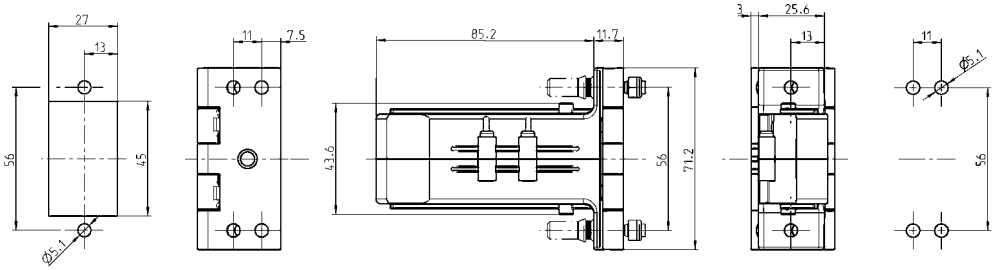

Cut out
Door / Flap

Cut out
Frame

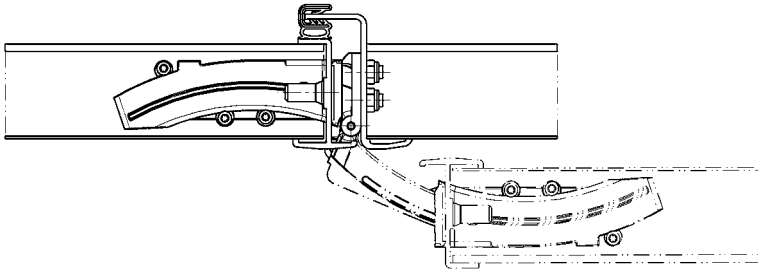

180° Gear hinge
housing, frame part and lever polyamide GF 50 black; slide POM black;
hinge slide and gearwheel zinc die zinc plated; washers PTFE;
pins stainless steel; screws m.s. zinc plated

	1007-U10

© EMKA Beschlagteile GmbH & Co. KG • 2018 • www.emka.com

90° 3D Hinge

PROGRAM 1031

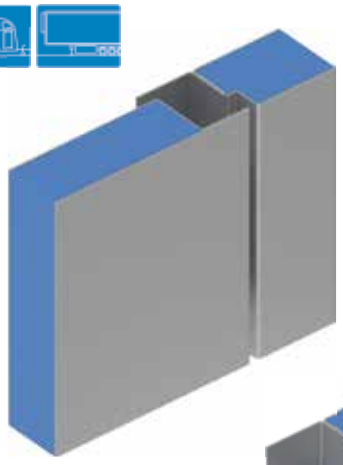

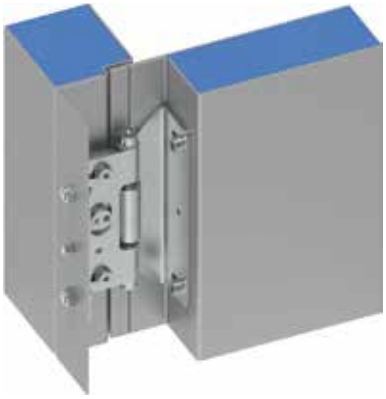

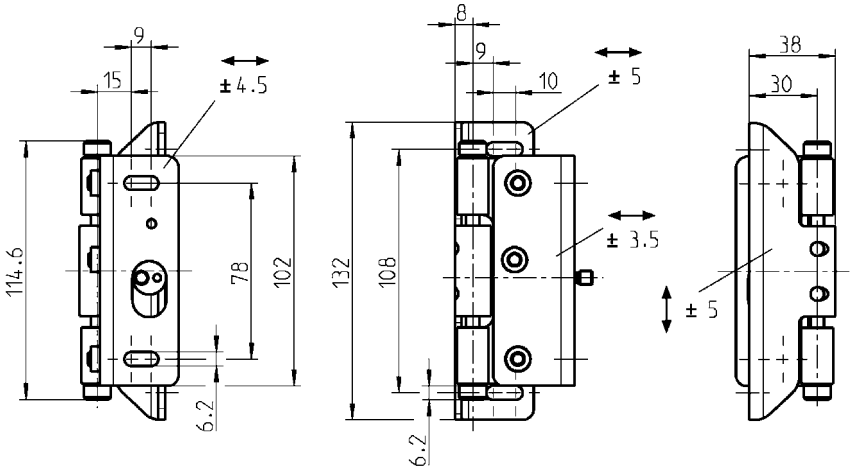

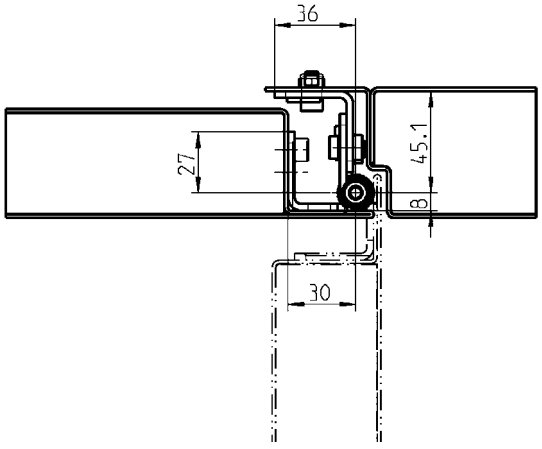

90° 3D Hinge m.s. zinc plated; eccentric bolt and srews m.s. zinc plated; plain bushes	
	1031-SU107

© EMKA Beschlagteile GmbH & Co. KG • 2018 • www.emka.com

180° Screw-on torque hinge

PROGRAM 1056

Product benefits

- holds any position continuously at adequate load
- constant torque across 180° adjustment range
- same torque while opening and closing
- compatible with all hinges of the 1056 program with identical cut out
- can replace door stops, cover stays or gas springs depending on installation location

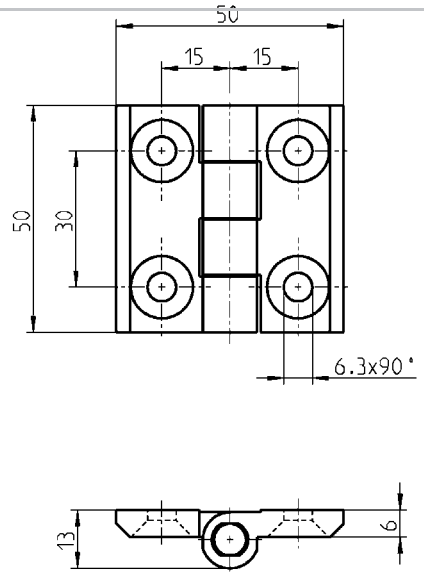

Dimensioning / Calculation:

The number of hinges in case of covers depends on the size and the weight of the cover.
We are pleased to help you with the dimensioning of the hinges on request.

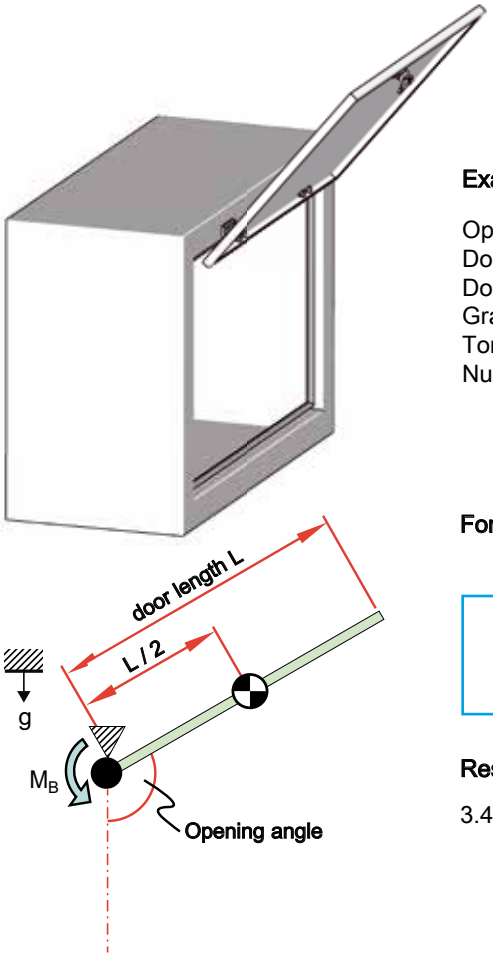

Example

Opening angle	α	= 120°
Door length:	L	= 0,4 m
Door mass:	m	= 2 kg
Gravitational pull:	g	= 9.81 m/s²
Torque hinge:	M	= 2 Nm
Number of hinges:	n	= ?

Formula:

$$\text{Total } M = \left(\frac{L \times m \times g \times \sin \alpha}{2}\right)$$

Result:

3.4 Nm = 2 hinges

Torque hinge
The hinge can be set continuously in any position.
There it remains at the same position.
The torque is similar when opening and closing.

Application

This torque hinge is suitable for doors and covers.

Technical data:

10,000 cycles
at 180° open - close

Also available on request with 1.0 Nm

180° screw-on torque hinge zinc-die black powder-coated; two torque Units m.s. nickel-plated		
Nm	**Tolerance ± %**	
2.0	25	1056-U110

© EMKA Beschlagteile GmbH & Co. KG • 2018 • www.emka.com

180° Screw-on torque hinge with adjustment function

PROGRAM 1056

Product benefits

- adjustable torque
- holds any position continuously at adequate load
- constant torque across 180° adjustment range
- same torque while opening and closing
- compatible with all hinges of the 1056 program with identical cut out
- can replace door stops, cover stays or gas springs depending on installation location

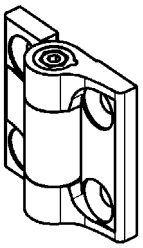

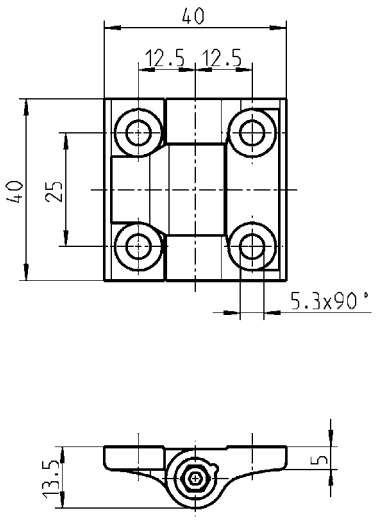

180° Screw-on torque hinge zinc-die black powder-coated for countersunk screw M5; friction cone polyacetal POM; screw and nut m.s. zinc-plated		
Nm	**max. tightening torque of screw in Nm**	
to ~ 2	0,5	1056-U6-01

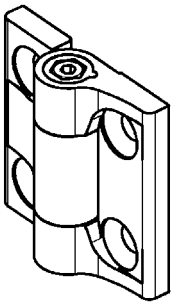

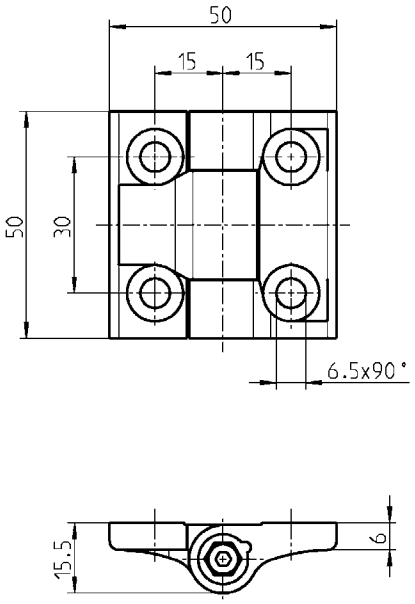

180° Screw-on torque hinge zinc-die black powder-coated for countersunk screw M6 (2D nut can be used); friction cone polyacetal POM; screw and nut m.s. zinc-plated		
Nm	**max. tightening torque of screw in Nm**	
to ~ 4	0,75	1056-U10-01

© EMKA Beschlagteile GmbH & Co. KG • 2018 • www.emka.com

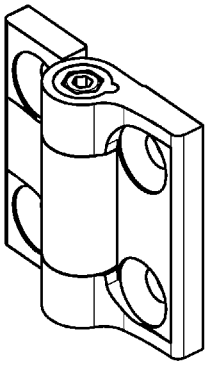

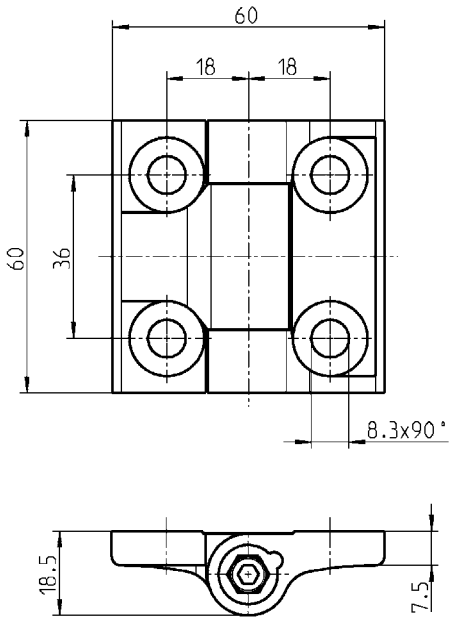

180° Screw-on torque hinge zinc-die black powder-coated for countersunk screw M8; friction cone polyacetal POM; screw and nut m.s. zinc-plated		
Nm	**max. tightening torque of screw in Nm**	
to ~ 6.5	1,5	1056-U14-01

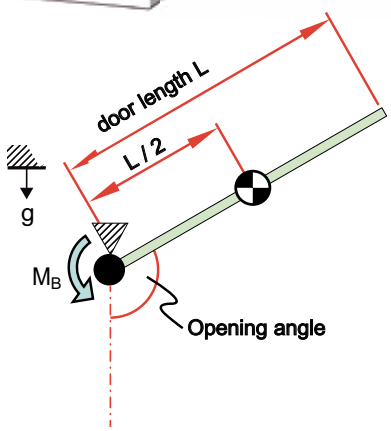

Dimensioning / Calculation:

The number of hinges in case of covers depends on the size and the weight of the cover.
We are pleased to help you with the dimensioning of the hinges on request.

Example

Opening angle . . . . . α = 120°
Door length: . . . . . L = 0,8 m
Door mass: . . . . . m = 3.5 kg
Gravitational pull: . . . . . g = 9.81 m/s²
Torque hinge: . . . . . M = 6.5 Nm
Number of hinges: . . . . . n = ?

Formula:

$$\text{Total} \quad M = \left(\frac{L \times m \times g \times \sin \alpha}{2} \right)$$

Result:

11.9 Nm = 2 hinges of item no. 1056-U14-01

Torque hinge
The hinge can be set continuously in any position.
There it remains at the same position.
The torque is similar when opening and closing.

Application

This torque hinge is suitable for doors and covers.

© EMKA Beschlagteile GmbH & Co. KG • 2018 • www.emka.com

EMKA
Beschlagteile

1 Latches and handles

2 Hinges

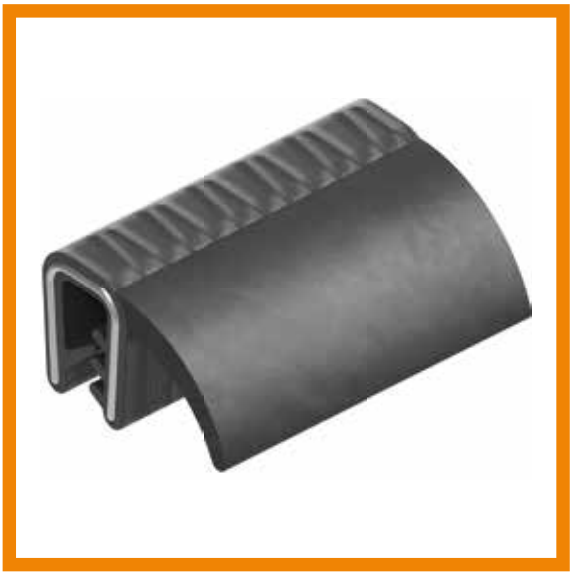

3 Gasketings

4 Accessories

Notes

© EMKA Beschlagteile GmbH & Co. KG • 2018 • www.emka.com

Tolerance of gaskets:
Gasket tolerance dependant upon DIN ISO 3302-1. Soft rubber usually according to ‘E2’ and sponge rubber according to ‘E3’.
PVC edge protection profile tolerance dependant upon DIN 16941-3B.

Following are some examples:

Nominal dimension		Tolerance class DIN ISO 3302-1 E2	Tolerance class DIN ISO 3302-1 E3
over	to		
0	1,5	±0.25	±0,40
1,5	2,5	±0,35	±0,50
2,5	4,0	±0,40	±0,70
4,0	6,3	±0,50	±0,80
6,3	10	±0,70	±1,00
10	16	±0,80	±1,30
16	25	±1,00	±1,60
25	40	±1,30	±2,00
40	63	±1,60	±2,50

Nominal dimension		Tolerance class DIN 16941-3B
over	to	
0	3	±0,40
3	6	±0,60
6	10	±0,70
10	18	±0,80
18	30	±1,00

The appropriate storage is important (optimal storage temperature +5°C to +20°C). For the storage of gaskets, attention should be paid to DIN 7716 (guidelines for storage, maintenance and cleaning of rubber products). If possible, wrong storage in respect to long lay days or storing times should be avoided,
since the mechanical characteristics may change.

Elastomers - operating temperatures and hardnesses:		
Materials	Operating temperatures	Hardness(±5° Shore A)
EPDM	approx. -40°C to 100°C	25° (MG) to 90° (WG)
NBR	approx. -30°C to 100°C	25° (MG) to 90° (WG)
CR	approx. -25°C to 100°C	40° to 90°
PVC	approx. -40°C to 70°C	55° to 75°
Silicon	approx. -60°C to 180°C	10° to 90°

MG=sponge rubber / WG=soft rubber

Recommended compression for extruded sealing profile:
The compression of our sealing profiles should be 50% max. since otherwise the function (tightness) and the resetting forces are affected. In practice, the profiles are compressed between 30-50%.
It does not matter, whether it is a EPDM, NBR or a silicone profile. Here, the mechanical properties are (unlike the chemical resistances) quite comparable. If the gasket is deformed beyond these limitations, there is the risk of the compression set (DVR) becoming too big because the material deforms plastically as well.
Then the gasket would be designed too lean.

Resistances:
Because of the large variety of possible chemicals, solvent (concentrations), operating temperatures and times, no evaluations concerning the possible resistances can be made at this point. In every individual case, a test in the present circumstances, like concentration, temperature and duration of the impact, is recommended.

Fire protection:
We supply materials certified according to the current fire protection standards for rail vehicles. E. g. according to DIN 5510-2; NF F 16-101/ -102; DIN EN 45545-2; UNI CEI 11170; ASTM-C and –E. Whether the achieved categories fit to the respective requirements or vehicle classes has to be verified for the individual case. Generally speaking you can achieve higher fire protection classes with silicone profiles than with EPDM.

Disclaimer:
As a rule, disclosed values are standard values detected on sample plates and correspond to our state of knowledge.
They do not, however, relieve the final user from their own thorough tests.

© EMKA Beschlagteile GmbH & Co. KG • 2018 • www.emka.com

Glazing profile with filler

PROGRAM 1030

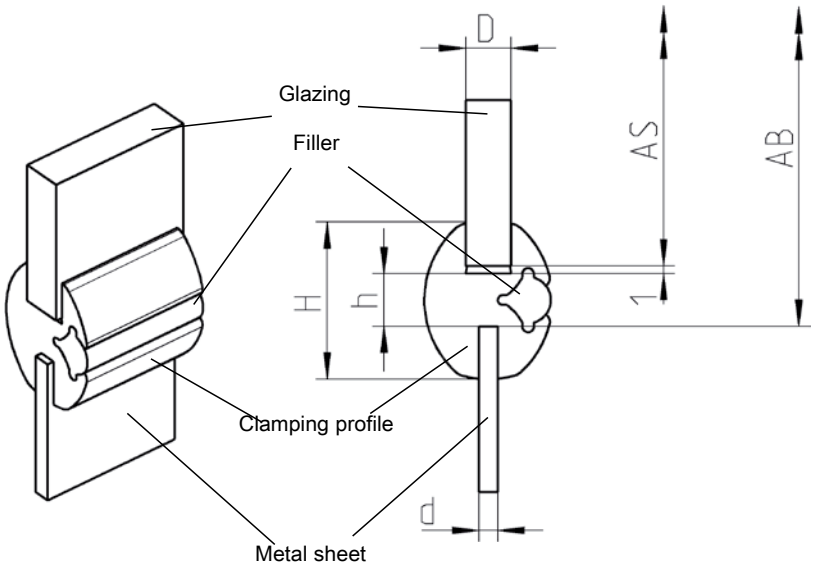

AS = dimension of the glazing
AB = dimension of the cut out

The indication of the bending radius is based on the pane receiver = AS +1 mm

Glazing profile EPDM 75° ± 5 Shore black with locking strip EPDM 85° ± 5 Shore black								
D	d	H	h	Bending radius	AB in mm	Clamping profile	+	Filler
4	2	15	4	>30	AS+10	1030-01	+	1030-04
4	2,5	21	7	>70	AS+16	1030-02	+	1030-05
6	2,5	21	7	>70	AS+16	1030-03	+	1030-05
5	2	17	5	>50	AS+12	1030-07	+	1030-10
2 tools for installation for glazing and filler								
								1030-U1

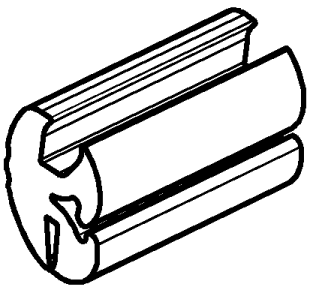

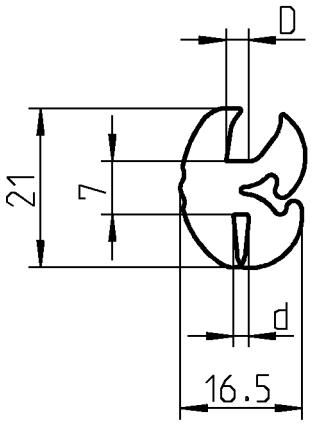

Glazing profile EPDM 70° ± 5 Shore black with locking strip EPDM 80° ± 5 Shore black						
D	d	Bending radius		Clamping profile	+	Filler
4	1.5	>80		1030-HP453	+	1030-HP454

© EMKA Beschlagteile GmbH & Co. KG • 2018 • www.emka.com
Other cross sections on request

Glazing profile with filler

PROGRAM 1030

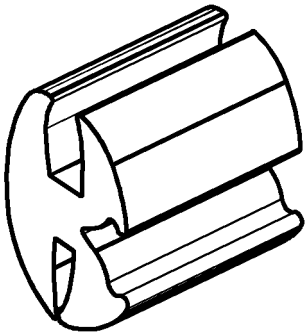

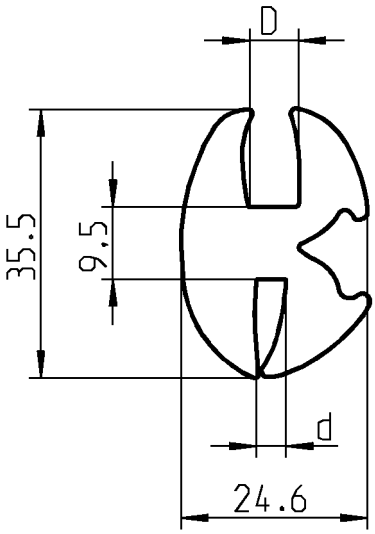

Glazing profile EPDM 70° ± 5 Shore black with locking strip EPDM 80° ± 5 Shore black						
D	**d**	**Bending radius**		**Clamping profile**	**+**	**Filler**
6	3.5	>100		1030-HP488	+	1030-HP454

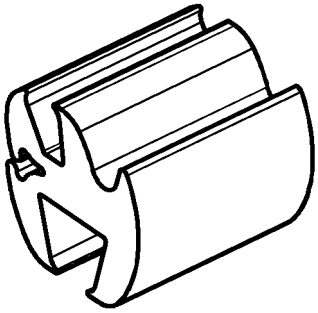

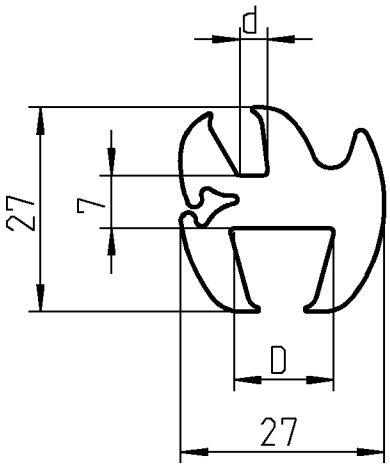

Glazing profile EPDM 70° ± 5 Shore black with locking strip EPDM 80° ± 5 Shore black						
D	**d**	**Bending radius**		**Clamping profile**	**+**	**Filler**
13	3.5	>100		1030-HP511	+	1030-HP454

© EMKA Beschlagteile GmbH & Co. KG • 2018 • www.emka.com
Other cross sections on request

Gaskets self-gripping

PROGRAM 1011

c UL us *

Steel spring core

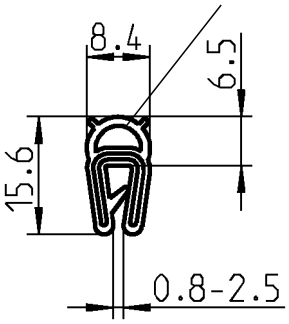

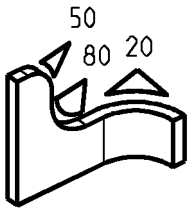

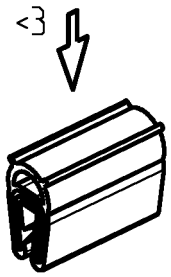

compressible

Gasket material of your choice	
Sponge rubber (EPDM) black (gripping profile EPDM 65° ± 5 Shore A)	1011-10*
Foam rubber(NBR) black (Clamp profile NBR 60° ± 5 Shore A)	1011-50

c UL us *

Steel spring core

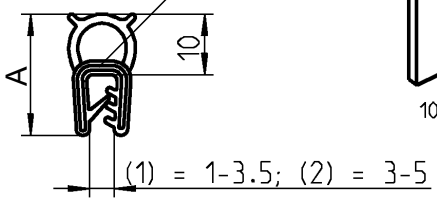

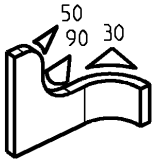

1011-05, -15

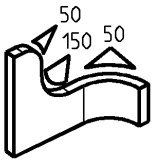

1011-47, -49

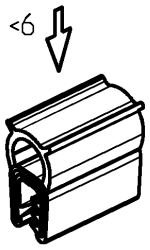

compressible

Gasket material of your choice	A	
Sponge rubber (EPDM) black (gripping profile EPDM 65° ± 5 Shore A)	20	1011-05* (1)
Foam rubber(NBR) black (Clamp profile NBR 60° ± 5 Shore A)	21	1011-15 (1)
Sponge rubber (EPDM) black (gripping profile EPDM 65° ± 5 Shore A)	21	1011-49 (2)
Foam rubber(NBR) black (Clamp profile NBR 60° ± 5 Shore A)	21	1011-47 (2)

c UL us *

Steel spring core

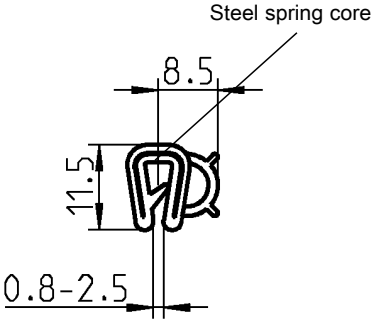

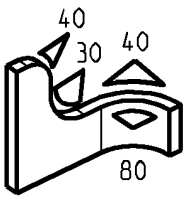

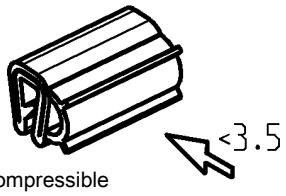

compressible

* c UL us

UL 50
UL 50E
UL 94-HB

Seal profile sponge rubber (EPDM) black (clamping profile EPDM 65°± 5 Shore A)	
	1011-09*

© EMKA Beschlagteile GmbH & Co. KG • 2018 • www.emka.com

Other cross sections on request

Gaskets self-gripping
PROGRAM 1011

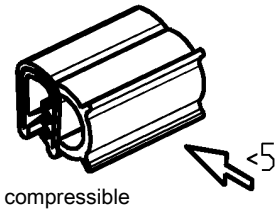

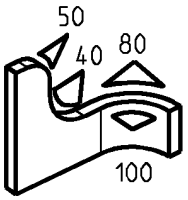

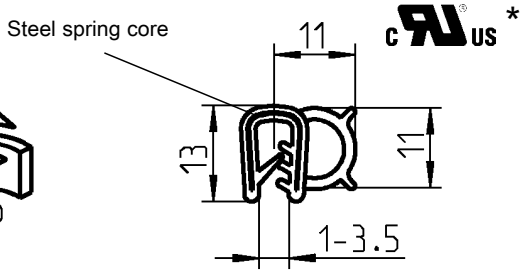

Gasket material of your choice	
Sponge rubber (EPDM) black (gripping profile EPDM 65° ± 5 Shore A)	1011-06*
Foam rubber(NBR) black (Clamp profile NBR 60° ± 5 Shore A)	1011-16

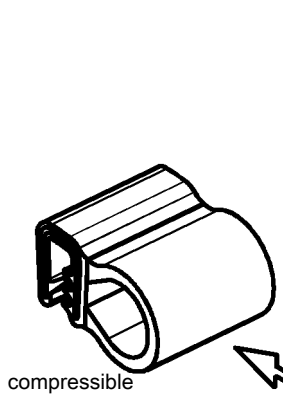

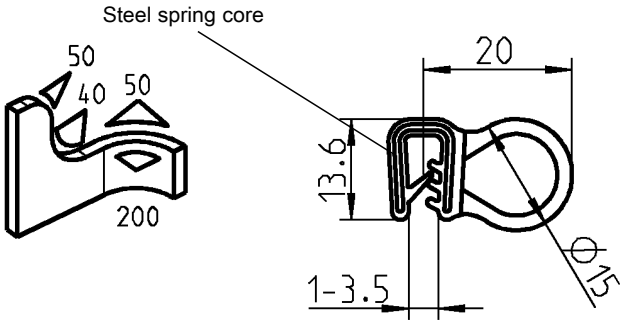

Seal profile sponge rubber (EPDM) black (clamping profile EPDM 65°± 5 Shore A)	
	1011-12*

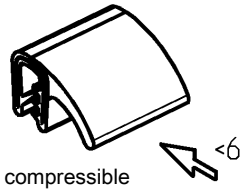

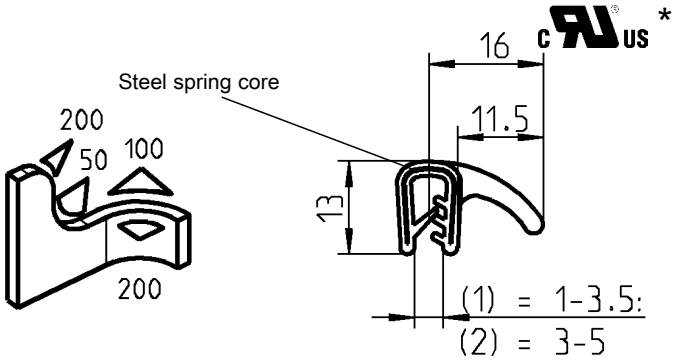

Gasket material of your choice		
Sponge rubber (EPDM) black (gripping profile EPDM 65° ± 5 Shore A)	(1)	1011-08*
Foam rubber(NBR) black (Clamp profile NBR 60° ± 5 Shore A)	(1)	1011-46
Foam rubber(NBR) black (Clamp profile NBR 60° ± 5 Shore A)	+ 2	1011-48

* c UL us

UL 50
UL 50E
UL 94-HB

© EMKA Beschlagteile GmbH & Co. KG • 2018 • www.emka.com
Other cross sections on request

Gaskets self-gripping

PROGRAM 1011

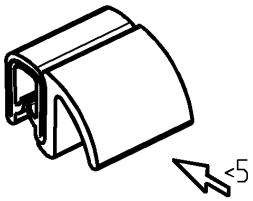

compressible

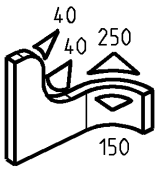

Steel spring core

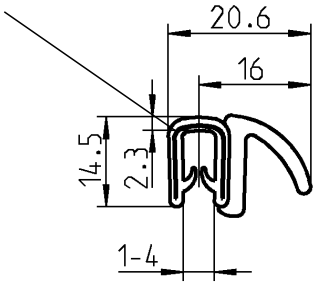

Gasket sponge-rubber (EPDM) black (clamping profile PVC 70° ± 5 Shore A)	
	1011-17

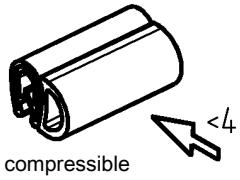

compressible

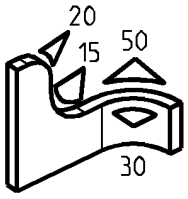

Steel spring core

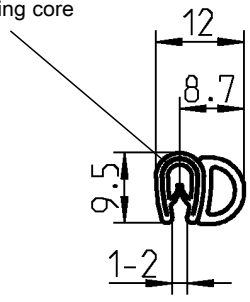

Gasket sponge-rubber (EPDM) black (clamping profile PVC 70° ± 5 Shore A)	
	1011-20

© EMKA Beschlagteile GmbH & Co. KG • 2018 • www.emka.com
Other cross sections on request

Cell sponge rubber
PROGRAM 1016

Coil length:

For depths	3 – 7 = the coil length	a	10 m
For depths	8 – 10 = the coil length	a	5 m
For depths	11 = in strip	a	1 m

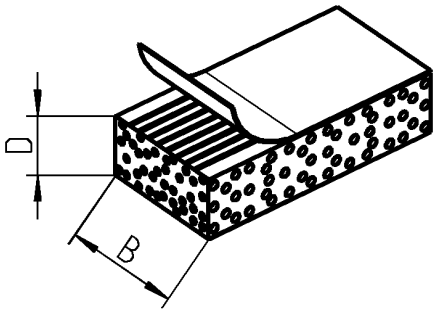

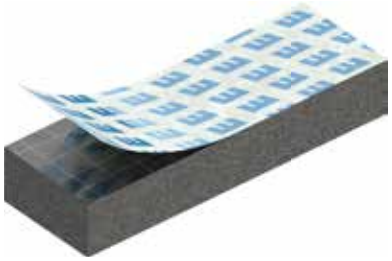

These items can be delivered from stock.
All others will have a lead time of 2 - 3 weeks.

Special lengths available in 6 to 8 weeks. Minimum quantity on request
(Article-No.: 1016- ... L mm) e.g. 1016-118-1400

Cell sponge rubber, material on choice, black, with stretch eliminating self-adhesive backing

Measurement				Measurement			
Width	Depth	EPDM	CR	Width	Depth	EPDM	CR
10	3	1016-13	1016-61	30	10	1016-123	1016-159
	4	1016-14	1016-62		12	1016-124	1016-160
	5	1016-15	1016-63		15	1016-125	1016-161
10	6	1016-75	1016-99		20	1016-126	1016-162
	8	1016-76	1016-100		25	1016-127	1016-163
	10	1016-77	1016-101	40	5	1016-128	1016-164
15	3	1016-16	1016-64		10	1016-129	1016-165
	4	1016-17	1016-65		15	1016-130	1016-166
	5	1016-18	1016-66		20	1016-131	1016-167
15	6	1016-78	1016-102		25	1016-132	1016-168
	8	1016-79	1016-103		30	1016-133	1016-169
	10	1016-80	1016-104	50	5	1016-134	1016-170
	12	1016-81	1016-105		10	1016-135	1016-171
	15	1016-82	1016-106		15	1016-136	1016-172
20	3	1016-19	1016-67		20	1016-137	1016-173
	4	1016-20	1016-68		25	1016-138	1016-174
	5	1016-21	1016-69		30	1016-139	1016-175
20	6	1016-83	1016-107	60	5	1016-140	1016-176
	8	1016-84	1016-108		10	1016-141	1016-177
	10	1016-85	1016-109		15	1016-142	1016-178
	12	1016-86	1016-110		20	1016-143	1016-179
	15	1016-87	1016-111		25	1016-144	1016-180
	20	1016-88	1016-112		30	1016-145	1016-181
25	3	1016-89	1016-113	70	5	1016-146	1016-182
	4	1016-90	1016-114		10	1016-147	1016-183
	6	1016-91	1016-115		15	1016-148	1016-184
	8	1016-92	1016-116		20	1016-149	1016-185
	10	1016-93	1016-117		25	1016-150	1016-186
	12	1016-94	1016-118		30	1016-151	1016-187
	15	1016-95	1016-119	80	5	1016-152	1016-188
	20	1016-96	1016-120		10	1016-153	1016-189
30	3	1016-22	1016-70		15	1016-154	1016-190
	4	1016-23	1016-71		20	1016-155	1016-191
	5	1016-24	1016-72		25	1016-156	1016-192
	6	1016-97	1016-121		30	1016-157	1016-193
	8	1016-98	1016-122		40	1016-158	1016-194

© EMKA Beschlagteile GmbH & Co. KG • 2018 • www.emka.com
Other cross sections on request

Fire protection info

History:

- The work on EN 45545 was finished in January 2012 for the time being.
- DIN EN 45545 was published in June 2013 (available from August 2013).
- The DOW (date of withdrawal) has been Extended from 6 to 36 months so that national standards, e. g. DIN 5510, are to be withdrawn by March 2016.

DIN EN 45545-2

This part stipulates the test procedures for test conditions and requirements for the reaction to fire of each Hazard Level.

Hazard Level:

Operation category	Building class			
	N: Standard vehicles	A Vehicles for automatic train operation not having staff on board that is trained for emergencies.	D Double-decker trains	S Sleepers and couchettes (bilevel or unilevel)
1	HL1	HL1	HL1	HL2
2	HL2	HL2	HL2	HL2
3	HL2	HL2	HL2	HL3
4	HL3	HL3	HL3	HL3

Operation categories:

Operation category 1: surface vehicles
Operation category 2: tunnel max. 5 km
Operation category 3: tunnel > 5 km
Operation category 4: tunnel, evacuation from the side not possible

Gasketings:

The gasketing has been included in DIN EN 45545 and have to meet the requirements R22 for indoors or R23 for outdoors as a function of the Hazard Level. In order to be able to define the Hazard Level, you need to know the Operation Category and Building Class, e. g. 2 (tunnel max. 5 km) D (double-decker trains)!

© EMKA Beschlagteile GmbH & Co. KG • 2018 • www.emka.com

Fire protection gaskets
PROGRAM 1011

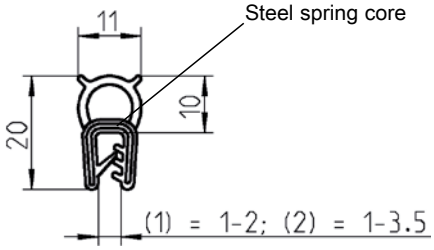

Fire protection sealing profile		
⑤⑥⑦	Sponge rubber (EPDM) black (clamping gasket sponge rubber EPDM)	1011-S19 (1)
①②	sponge rubber (EPDM) black (clamping profile soft rubber)	1011-S39 (2)

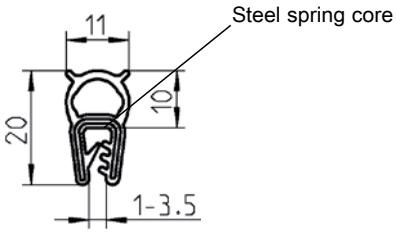

Fire protection sealing profile silicon solid material		
①②③④	graphite grey 65° ±5° Shore A	1011-S47-BF
②③	white 75° ±5° Shore A	1011-S47-HA

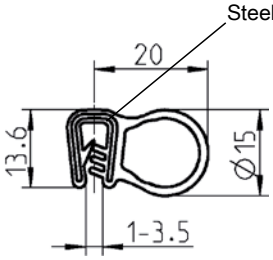

Fire protection sealing profile silicon solid material		
①②③④	graphite grey 65° ±5° Shore A	1011-S42-BF
②③	white 75° ±5° Shore A	1011-S42-HA

Fire protection standards	
①	DIN 5510-2
②	NF F 16-101/ -102
③	DIN EN 45545-2
④	UNI CEI 11170
⑤	ASTM C542-90
⑥	ASTM E662-95
⑦	SMP 800-C

© EMKA Beschlagteile GmbH & Co. KG • 2018 • www.emka.com
Other cross sections on request

Fire protection gaskets
PROGRAM 1011

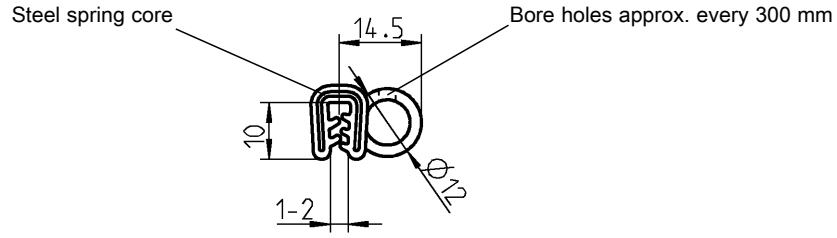

Fire protection sponge-rubber (EPDM) black (gasket sponge-rubber EPDM)	
⑤⑥⑦	1011-S23

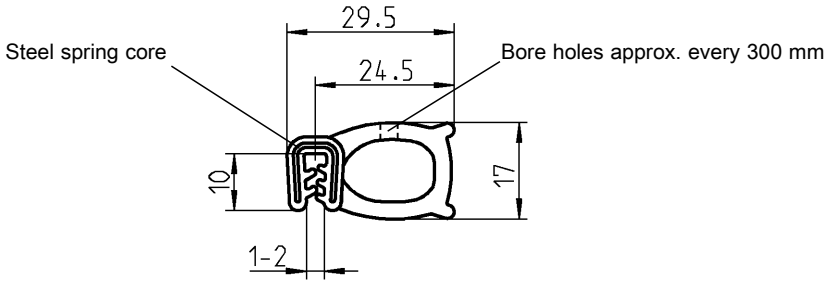

Fire protection sponge-rubber (EPDM) black (gasket sponge-rubber EPDM)	
⑤⑥⑦	1011-S24

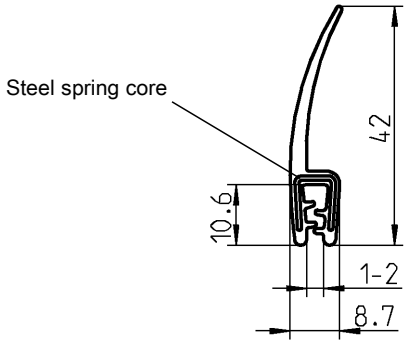

Fire protection sealing profile silicon solid material 65° ±5° Shore A graphite grey	
①②③④	1011-S83-BF

Fire protection standards	
①	DIN 5510-2
②	NF F 16-101/ -102
③	DIN EN 45545-2
④	UNI CEI 11170
⑤	ASTM C542-90
⑥	ASTM E662-95
⑦	SMP 800-C

© EMKA Beschlagteile GmbH & Co. KG • 2018 • www.emka.com
Other cross sections on request

Fire protection gaskets

PROGRAM 1003, 1011

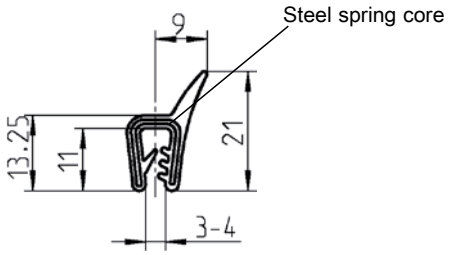

Fire protection sealing profile silicon solid material 65° ±5° Shore A graphite grey	
①②③④	1011-S53-BF

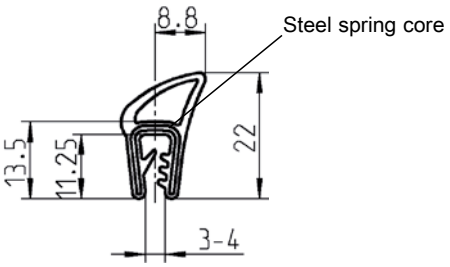

Fire protection sealing profile silicon solid material 65° ±5° Shore A graphite grey	
①②③④	1011-S56-BF

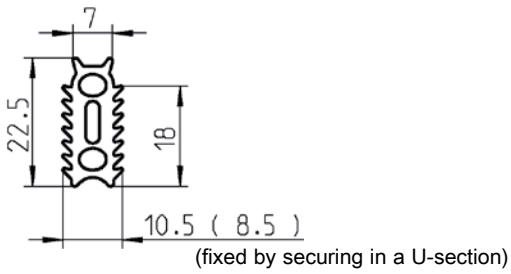

Fire protection sealing profile material of your choice		
①②	Sponge rubber 30 ±5° Shore A black	1003-S23
①	Silicon solid material 50° ±5° Shore A graphite grey	1003-S30-BF

Fire protection standards	
①	DIN 5510-2
②	NF F 16-101/ -102
③	DIN EN 45545-2
④	UNI CEI 11170
⑤	ASTM C542-90
⑥	ASTM E662-95
⑦	SMP 800-C

© EMKA Beschlagteile GmbH & Co. KG • 2018 • www.emka.com

Other cross sections on request

Notes

© EMKA Beschlagteile GmbH & Co. KG • 2018 • www.emka.com

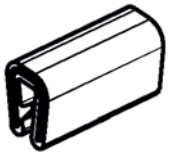

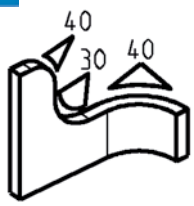

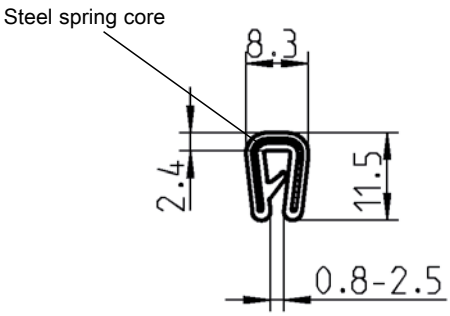

Edge protector EPDM 60° ± 5 Shore A black

	1010-12

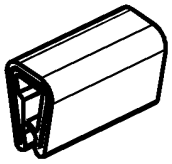

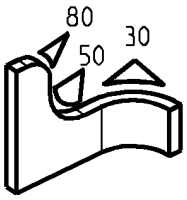

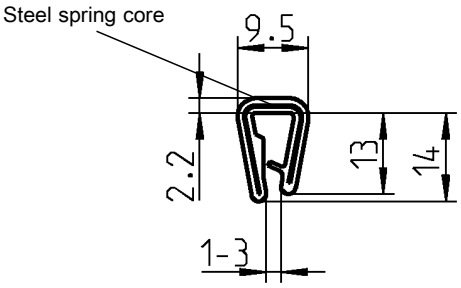

Edge protector PVC grey

	1010-05

Temperature stability = -40°C bis 90°C

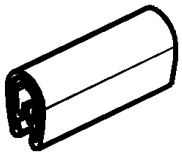

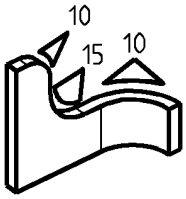

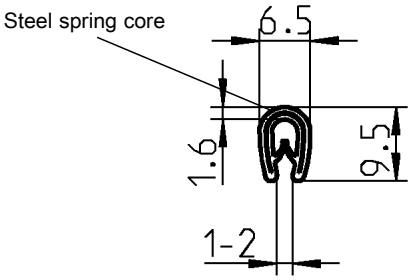

Edge protector PVC black

	1010-02

Temperature stability = -40°C bis 90°C

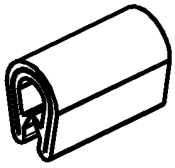

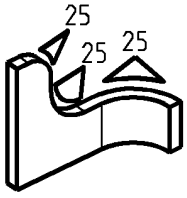

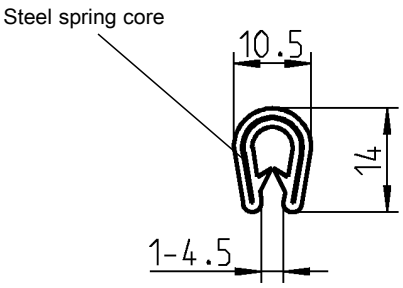

Edge protector PVC black

	1010-01

Edge protection
PROGRAM 1010

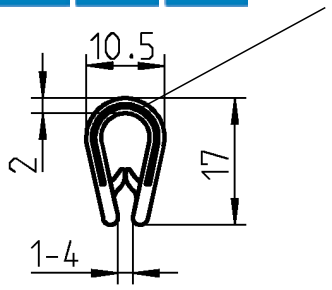

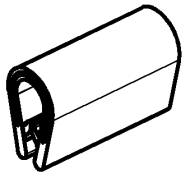

Edge protector PVC black	
	1010-08

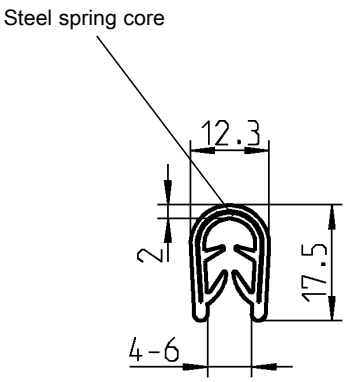

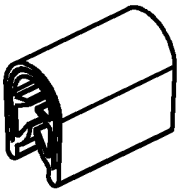

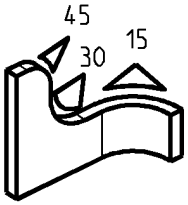

Edge protection PVC color of your choice	
black	1010-11
dark grey	1010-11-01

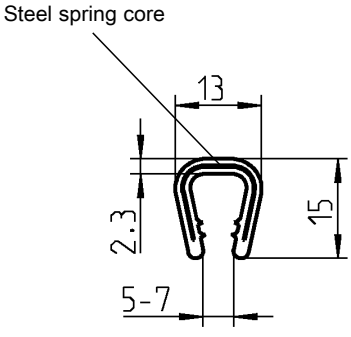

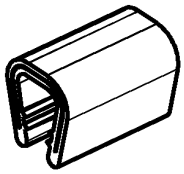

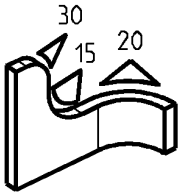

Edge protection color of your choice	
black	1010-06
light grey	1010-06-01

© EMKA Beschlagteile GmbH & Co. KG • 2018 • www.emka.com
Other cross sections on request

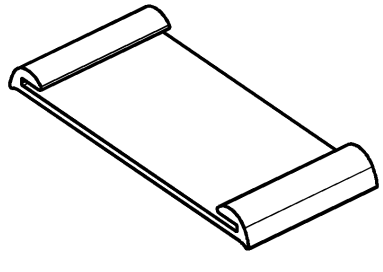

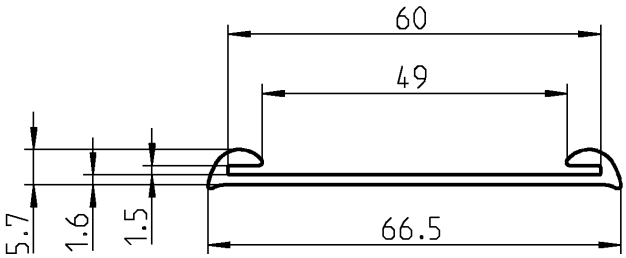

Support for tank bands EPDM 60° Shore A black	
	1038-HP437

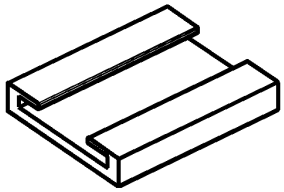

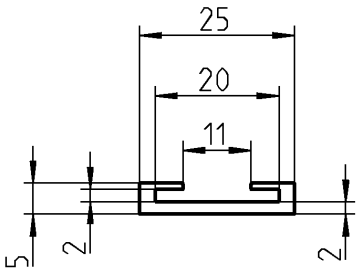

Support for tank bands NBR 70° Shore A black	
	1038-HP353

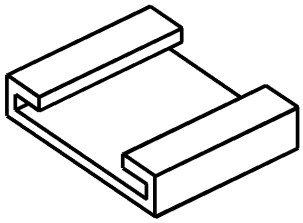

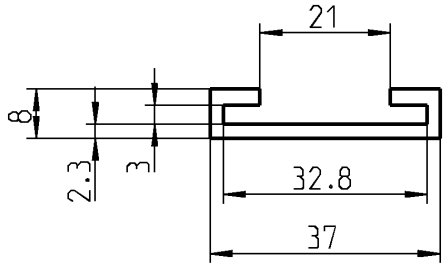

Support for tank bands NBR 70° Shore A black	
	1038-HP298

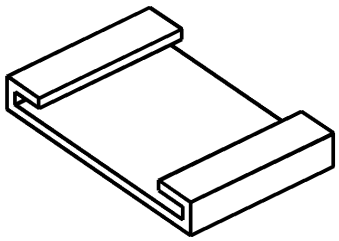

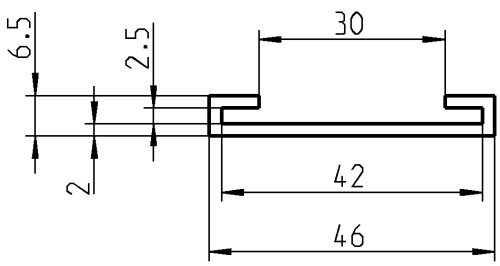

Support for tank bands NBR 70° Shore A black	
	1038-HP299

© EMKA Beschlagteile GmbH & Co. KG • 2018 • www.emka.com
Other cross sections on request

EMKA®
Beschlagteile

1 Latches and handles

2 Hinges

3 Gasketings

4 Accessories

Retractable loop

PROGRAM 5291

EMKA Beschlagteile

Detail: Loop and belt

Item without bracing

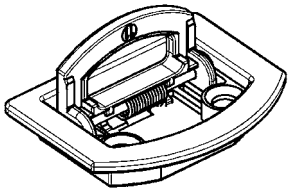

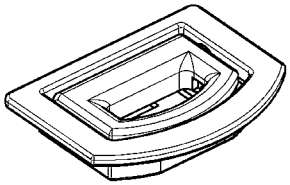

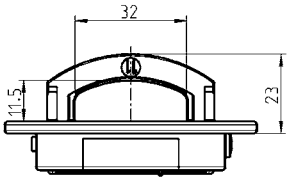

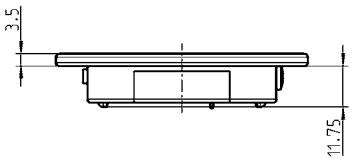

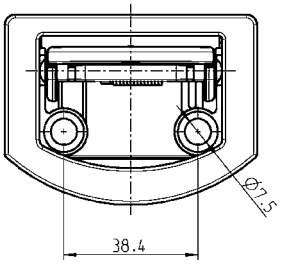

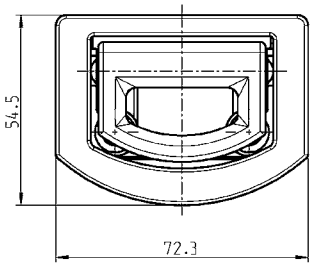

Complete item with bracing

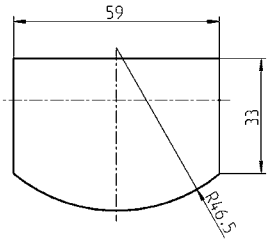

Cut out

- e.g. for suitcases, bicycles and pushchairs
- retrofittable for all vehicles
- robust die-cast zinc construction
- accessable
- depending on surface resiliant up to 3000 N (300 kgs)
- further colours upon request

Retractable loop zinc die loop chrome plated, trough black powder coated; shaft m.s. zinc plated; with spring; mounting plates and countersunk cross recessed head screw M6 x 50 m.s. zinc plated	
	5291-U701-IA

© EMKA Beschlagteile GmbH & Co. KG • 2018 • www.emka.com

Slinging ring
PROGRAMM 6040

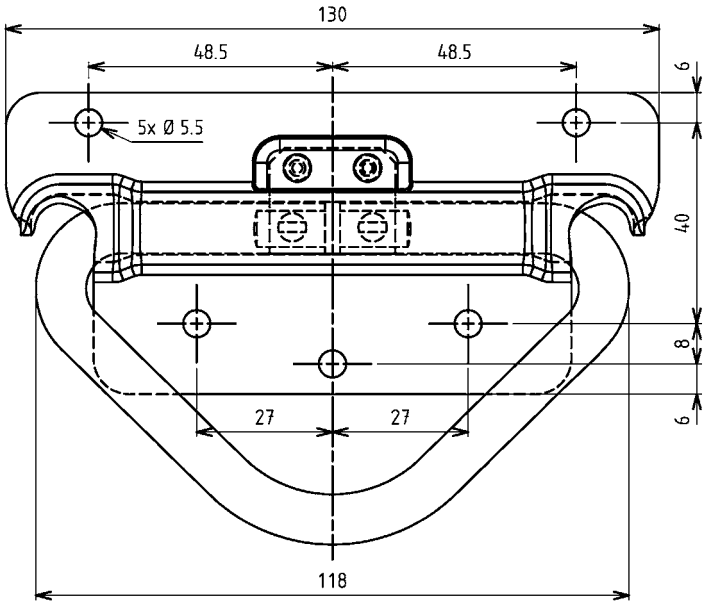

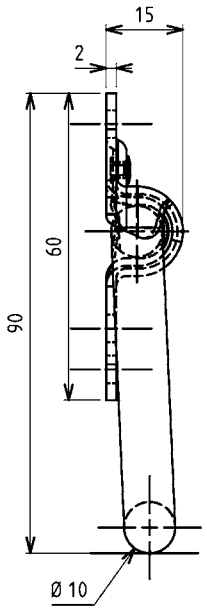

Slinging ring	
	with leaf spring
Zinc plated steel DS plus Top Coat	6040-U80-JQ
AISI 304 drilled	6040-U80-PC

© EMKA Beschlagteile GmbH & Co. KG • 2018 • www.emka.com

Dove tail
PROGRAM 8900

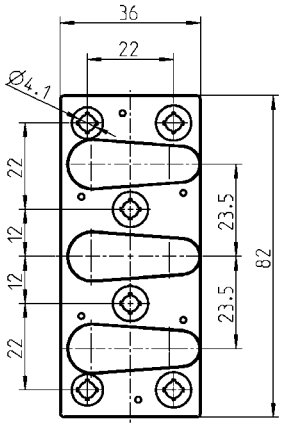

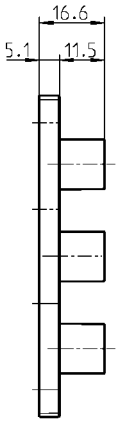

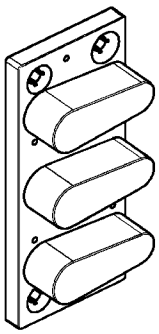

Dove tail zinc die with rubber coating self lubricated	
	8900-SB12-01

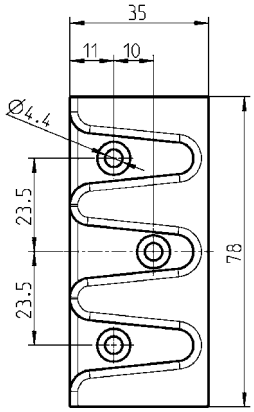

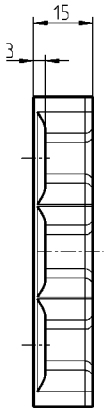

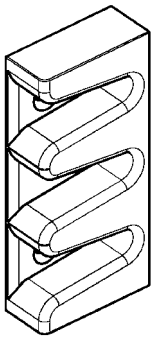

Dove tail zinc die raw	
	8900-S331-03KA

© EMKA Beschlagteile GmbH & Co. KG • 2018 • www.emka.com

Dove tail
PROGRAM 8900

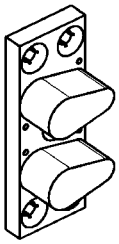

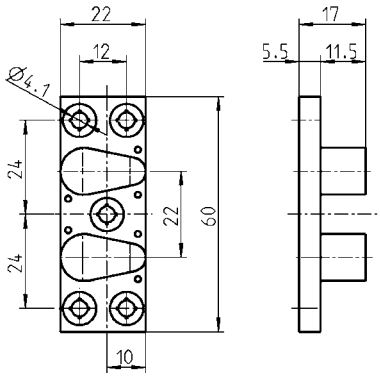

Dove tail zinc die with rubber coating self lubricated	
	8900-SB11-01

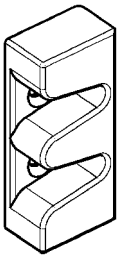

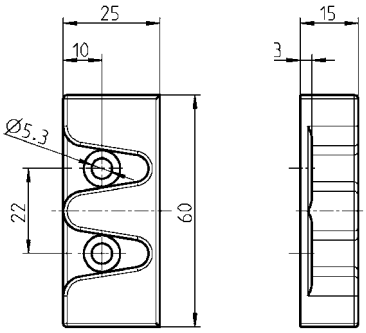

Dove tail zinc die raw	
	8900-S330-03KA

© EMKA Beschlagteile GmbH & Co. KG • 2018 • www.emka.com

Clip in vent
PROGRAMM 5225

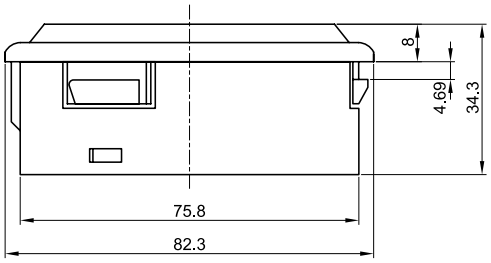

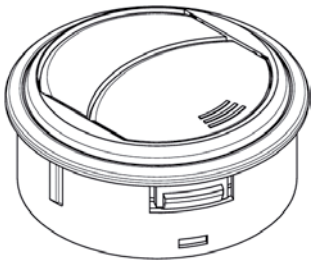

Infinitely adjustable and rotating

Clip in vent ABS	
Black housing	5225-U302-AA
Housing RAL 9006	5225-U302-BK

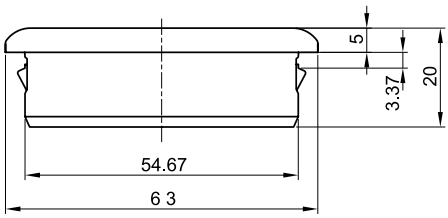

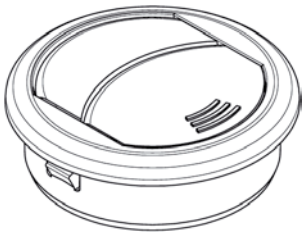

Infinitely adjustable, non rotating

Clip in vent ABS black	
	5225-U303-AA

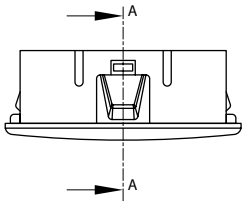

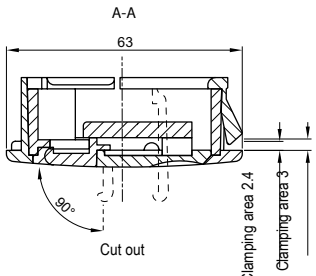

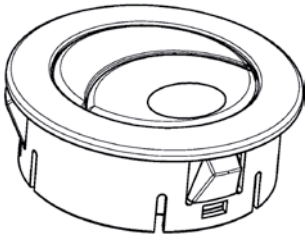

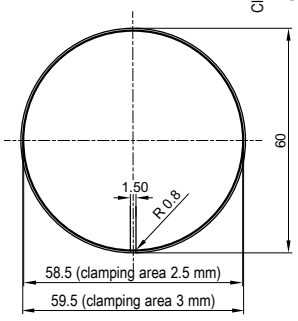

Infinitely adjustable and rotating

Clip in vent ABS black	
	5225-U304-AA

© EMKA Beschlagteile GmbH & Co. KG • 2018 • www.emka.com

Stowage clamp for axe;
Stowage clamp for spade

PROGRAMM 5225

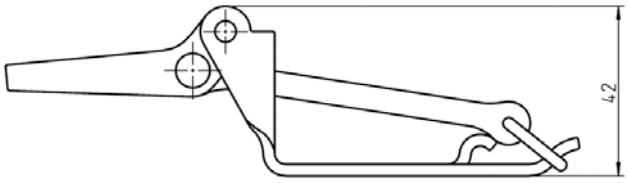

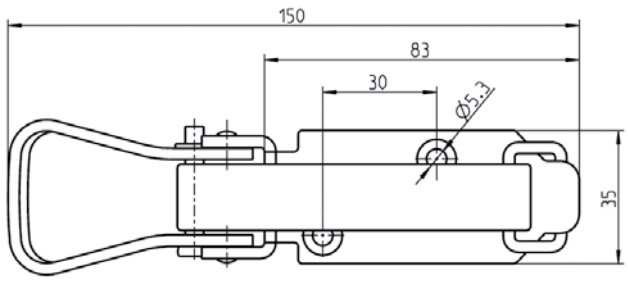

Stowage clamp for claw axe with coating from selection with black rubber strap	
green	5225-U306
zinc plated	5225-U306-JB
CDP coated black	5225-U306-IL

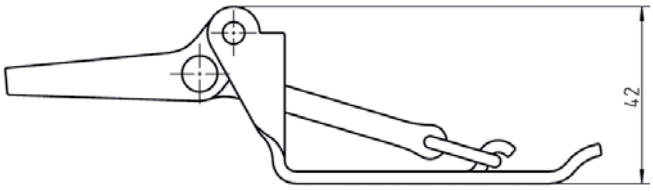

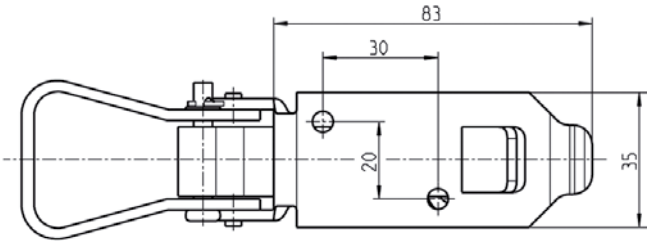

Stowage clamp for spade with coating from selection with black rubber strap	
green	5225-U307
zinc plated	5225-U307-JB
CDP coated black	5225-U307-IL

© EMKA Beschlagteile GmbH & Co. KG • 2018 • www.emka.com

Tail hook

PROGRAMM 5225

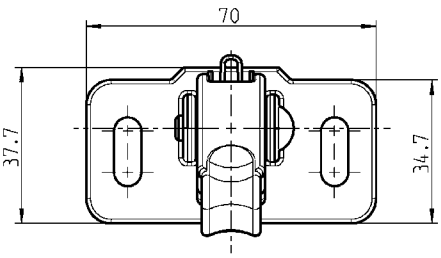

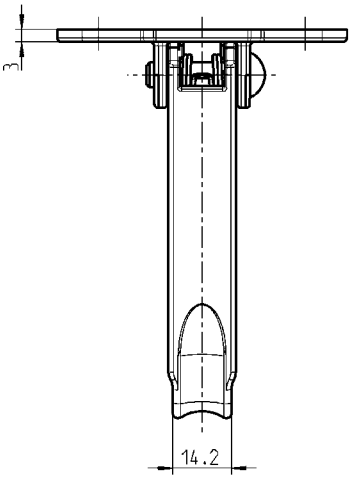

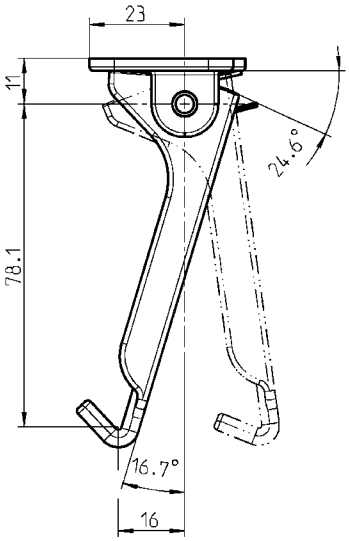

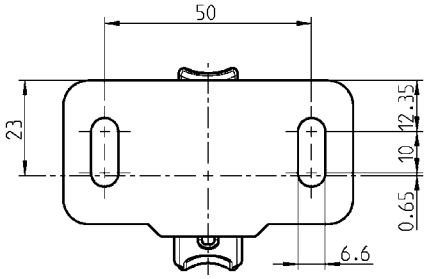

Tail hook AISI 316; spring and half-round rivet stainless steel	
	5225-U400

© EMKA Beschlagteile GmbH & Co. KG • 2018 • www.emka.com

Index by Part Number

Item no.:	Catalogue page
1000-04	1.3-130
1000-05	1.3-130
1000-06	1.3-130
1000-07	1.3-130
1000-08	1.3-130
1000-09	1.3-130
1000-10	1.2-120
1000-10	1.2-130
1000-10	1.2-400
1000-11	1.2-120
1000-11	1.2-130
1000-11	1.2-400
1000-12	1.2-120
1000-12	1.2-130
1000-12	1.2-400
1000-13	1.2-120
1000-13	1.2-130
1000-13	1.2-400
1000-14	1.2-120
1000-14	1.2-130
1000-14	1.2-400
1000-15	1.2-120
1000-15	1.2-130
1000-15	1.2-400
1000-16	1.2-120
1000-16	1.2-130
1000-16	1.2-400
1000-17	1.2-120
1000-17	1.2-130
1000-17	1.2-400
1000-18	1.2-120
1000-18	1.2-400
1000-19	1.2-120
1000-19	1.2-400
1000-20	1.2-120
1000-20	1.2-400
1000-21	1.2-120
1000-21	1.2-400
1000-22	1.2-120
1000-22	1.2-400
1000-23	1.2-154
1000-23	1.3-130
1000-24	1.2-154
1000-24	1.3-130
1000-25	1.2-120
1000-25	1.2-130
1000-25	1.2-400
1000-26	1.2-120
1000-26	1.2-130
1000-26	1.2-400
1000-27	1.2-120
1000-27	1.2-130
1000-27	1.2-400
1000-28	1.2-120
1000-28	1.2-130
1000-28	1.2-400
1000-33	1.3-160
1000-34	1.3-160
1000-35	1.3-160
1000-36	1.3-160
1000-37	1.3-160
1000-38	1.3-160
1000-39	1.3-160
1000-50	1.2-120
1000-50	1.2-130
1000-50	1.2-400

Item no.:	Catalogue page
1000-51	1.2-120
1000-51	1.2-130
1000-51	1.2-400
1000-52	1.2-120
1000-52	1.2-130
1000-52	1.2-400
1000-53	1.2-120
1000-53	1.2-130
1000-53	1.2-400
1000-54	1.2-120
1000-54	1.2-130
1000-54	1.2-400
1000-55	1.2-120
1000-55	1.2-130
1000-55	1.2-400
1000-56	1.2-120
1000-56	1.2-130
1000-56	1.2-400
1000-59	1.3-130
1000-64	1.3-130
1000-103	1.2-140
1000-112	1.2-120
1000-112	1.2-400
1000-113	1.2-120
1000-113	1.2-400
1000-114	1.3-160
1000-115	1.3-160
1000-179	1.2-400
1000-179-PD	1.2-400
1000-180	1.2-400
1000-180-PD	1.2-400
1000-211-L	1.3-160
1000-221	1.2-400
1000-221-PD	1.2-400
1000-223	1.2-400
1000-223-PD	1.2-400
1000-225	1.2-400
1000-225-PD	1.2-400
1000-227	1.2-400
1000-227-PD	1.2-400
1000-228	1.2-400
1000-228-PD	1.2-400
1000-229	1.2-400
1000-229-PD	1.2-400
1000-230	1.2-400
1000-230-PD	1.2-400
1000-352	1.3-130
1000-386-18	1.2-400
1000-386-20	1.2-400
1000-386-22	1.2-400
1000-386-24	1.2-400
1000-386-28	1.2-400
1000-386-30	1.2-400
1000-476	1.2-410
1000-477	1.2-410
1000-478	1.2-410
1000-990	1.2-154
1000-991	1.2-154
1000-5043-SI	1.2-400
1000-5046	1.2-400
1000-5046-SI	1.2-400
1000-5119	1.2-400
1000-5161	1.2-400
1000-5164	1.2-400
1000-SU853	1.2-120

Item no.:	Catalogue page
1000-SU853-01	1.2-120
1000-U1	1.2-154
1000-U2	1.2-154
1000-U3	1.2-154
1000-U4	1.2-154
1000-U5	1.2-154
1000-U6	1.2-154
1000-U7	1.2-154
1000-U7-G	1.2-154
1000-U13	1.2-154
1000-U17	1.2-154
1000-U18	1.2-154
1000-U20	1.2-154
1000-U45	1.2-154
1000-U45-G	1.2-154
1000-U46	1.2-154
1000-U47	1.2-154
1000-U47-G	1.2-154
1000-U49	1.3-160
1000-U49	1.3-160
1000-U49	1.3-160
1000-U51	1.2-154
1000-U54	1.2-154
1000-U54-G	1.2-154
1000-U55	1.2-154
1000-U55-G	1.2-154
1000-U56	1.2-154
1000-U56-G	1.2-154
1000-U65	1.2-154
1000-U66	1.2-154
1000-U67	1.2-154
1000-U68	1.2-154
1000-U69	1.2-154
1000-U78	1.2-154
1000-U96	1.2-154
1000-U134	1.2-154
1000-U135	1.2-154
1000-U136	1.2-154
1000-U137	1.2-154
1000-U138	1.2-154
1000-U141	1.3-160
1000-U141	1.3-160
1000-U141	1.3-160
1000-U142	1.2-154
1000-U144-L	1.3-160
1000-U155	1.2-154
1000-U155-G	1.2-154
1000-U164	1.2-154
1000-U165	1.2-154
1000-U166	1.2-154
1000-U167	1.2-400
1000-U168	1.2-154
1000-U169	1.2-154
1000-U182	1.2-154
1000-U183	1.2-154
1000-U184-N	1.2-154
1000-U185-N	1.2-154
1000-U186-N	1.2-154
1000-U187-N	1.2-154
1000-U188-N	1.2-154
1000-U194	1.2-154
1000-U195	1.2-154
1000-U196-N	1.2-154
1000-U197	1.2-154
1000-U198	1.2-154

Item no.:	Catalogue page
1000-U219	1.2-154
1000-U219-G	1.2-154
1000-U220	1.2-154
1000-U220-G	1.2-154
1000-U221	1.2-154
1000-U221-G	1.2-154
1000-U222	1.2-154
1000-U222-G	1.2-154
1000-U223	1.2-154
1000-U223-G	1.2-154
1000-U224	1.2-154
1000-U224-G	1.2-154
1000-U225	1.2-154
1000-U226	1.2-154
1000-U227	1.2-154
1000-U228	1.2-154
1000-U229	1.2-154
1000-U230	1.2-154
1000-U246	1.2-154
1000-U248	1.2-154
1000-U249	1.2-154
1000-U317	1.2-154
1000-U318	1.2-154
1000-U322	1.2-154
1000-U323	1.2-154
1000-U324	1.2-154
1000-U325	1.2-154
1000-U326	1.2-154
1000-U327	1.2-154
1000-U328	1.2-154
1000-U329	1.2-154
1000-U330	1.2-154
1000-U331	1.2-154
1000-U332	1.2-154
1000-U333	1.2-154
1000-U334	1.2-154
1000-U335	1.2-154
1000-U336	1.2-154
1000-U351	1.2-154
1000-U352	1.2-154
1000-U504	1.2-154
1000-U505	1.2-154
1000-U506	1.2-154
1000-U507	1.2-154
1000-U509	1.2-154
1000-U510	1.2-154
1000-U530	1.2-154
1000-U531	1.2-154
1000-U532	1.2-154
1000-U533	1.2-154
1000-U534	1.2-154
1000-U535	1.2-154
1000-U536	1.2-154
1000-U537	1.2-154
1000-U538-L	1.3-160
1000-U630	1.2-154
1000-U631	1.2-154
1000-U729	1.2-154
1000-U736	1.2-154
1000-U737	1.2-154
1000-U738	1.2-154
1000-U739	1.2-154
1000-U757	1.2-154
1000-U757-01	1.2-154
1000-U769	1.2-154
1000-U776	1.2-400

© EMKA Beschlagteile GmbH & Co. KG • 2018 • www.emka.com

Index by Part Number

EMKA Beschlagteile

Item no.:	Catalogue page
1000-U776-PH	1.2-400
1000-U784	1.2-170
1000-U785	1.2-170
1000-U787	1.2-170
1000-U788	1.2-170
1000-U789	1.2-170
1000-U790	1.2-170
1000-U791	1.2-170
1000-U792	1.2-170
1000-U793	1.2-170
1000-U820	1.2-160
1000-U821	1.2-160
1000-U822	1.2-160
1000-U823	1.2-160
1000-U824	1.2-160
1000-U825	1.2-160
1000-U826	1.2-160
1000-U827	1.2-160
1000-U828	1.2-160
1000-U829	1.3-150
1000-U841	1.2-154
1000-U866-02	1.2-120
1000-U866-03	1.2-120
1000-U875-03	1.2-140
1000-U876	1.2-154
1000-U878	1.2-154
1000-U879	1.2-154
1000-U897	1.3-138
1001-11	1.3-160
1001-12	1.3-160
1001-13	1.3-160
1001-14	1.3-160
1001-15	1.3-160
1001-16	1.3-160
1001-17	1.3-160
1001-45	1.3-130
1001-46	1.3-130
1001-47	1.3-130
1001-48	1.3-130
1001-49	1.3-130
1001-50	1.3-130
1001-65	1.3-150
1001-66	1.3-150
1001-67	1.3-150
1001-69	1.3-150
1001-70	1.3-150
1001-71	1.3-150
1001-72	1.3-150
1001-73	1.3-150
1001-U13	1.3-130
1001-U14	1.3-130
1001-U15	1.3-130
1001-U16	1.3-130
1001-U17	1.3-130
1001-U18	1.3-130
1001-U21	1.3-150
1001-U22	1.3-150
1001-U23	1.3-150
1001-U24	1.3-130
1001-U25	1.3-130
1001-U26	1.3-130
1001-U27	1.3-130
1001-U28	1.3-130
1001-U29	1.3-130
1001-U32	1.3-130
1001-U33	1.3-130
1001-U43	1.3-110
1001-U44	1.3-110
1001-U45-LI	1.3-120
1001-U45-RE	1.3-120
1003-S23	3.3-140
1003-S30-BF	3.3-140
1004-01	1.2-420
1004-02	1.2-420
1004-03	1.2-420
1004-04	1.2-420
1004-05	1.2-420
1004-06	1.2-420
1004-17	1.2-420
1004-18	1.2-420
1004-19	1.2-420
1004-20	1.2-420
1004-21	1.2-420
1004-24	1.2-420
1004-26	1.2-420
1004-29	1.2-420
1004-30	1.2-420
1004-31	1.2-420
1004-33	1.2-420
1004-34	1.2-420
1004-35	1.2-420
1004-36	1.2-420
1004-37	1.2-420
1004-38	1.2-420
1004-39	1.2-420
1004-41	1.2-420
1004-42	1.2-420
1004-48	1.2-420
1004-49	1.2-420
1004-51	1.2-420
1004-52	1.2-420
1004-54	1.2-420
1007-U10	2.1-200
1010-01	3.4-110
1010-02	3.4-110
1010-05	3.4-110
1010-06	3.4-120
1010-06-01	3.4-120
1010-08	3.4-120
1010-11	3.4-120
1010-11-01	3.4-120
1010-12	3.4-110
1011-05	3.2-110
1011-06	3.2-120
1011-08	3.2-120
1011-09	3.2-110
1011-10	3.2-110
1011-12	3.2-120
1011-15	3.2-110
1011-16	3.2-120
1011-17	3.2-130
1011-20	3.2-130
1011-46	3.2-120
1011-47	3.2-110
1011-48	3.2-120
1011-49	3.2-110
1011-50	3.2-110
1011-S19	3.3-120
1011-S23	3.3-130
1011-S24	3.3-130
1011-S39	3.3-120
1011-S42-BF	3.3-120
1011-S42-HA	3.3-120
1011-S47-BF	3.3-120
1011-S47-HA	3.3-120
1011-S53-BF	3.3-140
1011-S56-BF	3.3-140
1011-S83-BF	3.3-130
1016-13	3.2-140
1016-14	3.2-140
1016-15	3.2-140
1016-16	3.2-140
1016-17	3.2-140
1016-18	3.2-140
1016-19	3.2-140
1016-20	3.2-140
1016-21	3.2-140
1016-22	3.2-140
1016-23	3.2-140
1016-24	3.2-140
1016-61	3.2-140
1016-62	3.2-140
1016-63	3.2-140
1016-64	3.2-140
1016-65	3.2-140
1016-66	3.2-140
1016-67	3.2-140
1016-68	3.2-140
1016-69	3.2-140
1016-70	3.2-140
1016-71	3.2-140
1016-72	3.2-140
1016-75	3.2-140
1016-76	3.2-140
1016-77	3.2-140
1016-78	3.2-140
1016-79	3.2-140
1016-80	3.2-140
1016-81	3.2-140
1016-82	3.2-140
1016-83	3.2-140
1016-84	3.2-140
1016-85	3.2-140
1016-86	3.2-140
1016-87	3.2-140
1016-88	3.2-140
1016-89	3.2-140
1016-90	3.2-140
1016-91	3.2-140
1016-92	3.2-140
1016-93	3.2-140
1016-94	3.2-140
1016-95	3.2-140
1016-96	3.2-140
1016-97	3.2-140
1016-98	3.2-140
1016-99	3.2-140
1016-100	3.2-140
1016-101	3.2-140
1016-102	3.2-140
1016-103	3.2-140
1016-104	3.2-140
1016-105	3.2-140
1016-106	3.2-140
1016-107	3.2-140
1016-108	3.2-140
1016-109	3.2-140
1016-110	3.2-140
1016-111	3.2-140
1016-112	3.2-140
1016-113	3.2-140
1016-114	3.2-140
1016-115	3.2-140
1016-116	3.2-140
1016-117	3.2-140
1016-118	3.2-140
1016-119	3.2-140
1016-120	3.2-140
1016-121	3.2-140
1016-122	3.2-140
1016-123	3.2-140
1016-124	3.2-140
1016-125	3.2-140
1016-126	3.2-140
1016-127	3.2-140
1016-128	3.2-140
1016-129	3.2-140
1016-130	3.2-140
1016-131	3.2-140
1016-132	3.2-140
1016-133	3.2-140
1016-134	3.2-140
1016-135	3.2-140
1016-136	3.2-140
1016-137	3.2-140
1016-138	3.2-140
1016-139	3.2-140
1016-140	3.2-140
1016-141	3.2-140
1016-142	3.2-140
1016-143	3.2-140
1016-144	3.2-140
1016-145	3.2-140
1016-146	3.2-140
1016-147	3.2-140
1016-148	3.2-140
1016-149	3.2-140
1016-150	3.2-140
1016-151	3.2-140
1016-152	3.2-140
1016-153	3.2-140
1016-154	3.2-140
1016-155	3.2-140
1016-156	3.2-140
1016-157	3.2-140
1016-158	3.2-140
1016-159	3.2-140
1016-160	3.2-140
1016-161	3.2-140
1016-162	3.2-140
1016-163	3.2-140
1016-164	3.2-140
1016-165	3.2-140
1016-166	3.2-140
1016-167	3.2-140

© EMKA Beschlagteile GmbH & Co. KG • 2018 • www.emka.com

Index by Part Number

Item no.:	Catalogue page
1016-168	3.2-140
1016-169	3.2-140
1016-170	3.2-140
1016-171	3.2-140
1016-172	3.2-140
1016-173	3.2-140
1016-174	3.2-140
1016-175	3.2-140
1016-176	3.2-140
1016-177	3.2-140
1016-178	3.2-140
1016-179	3.2-140
1016-180	3.2-140
1016-181	3.2-140
1016-182	3.2-140
1016-183	3.2-140
1016-184	3.2-140
1016-185	3.2-140
1016-186	3.2-140
1016-187	3.2-140
1016-188	3.2-140
1016-189	3.2-140
1016-190	3.2-140
1016-191	3.2-140
1016-192	3.2-140
1016-193	3.2-140
1016-194	3.2-140
1019-U1	1.3-160
1030-01	3.1-110
1030-02	3.1-110
1030-03	3.1-110
1030-04	3.1-110
1030-05	3.1-110
1030-07	3.1-110
1030-10	3.1-110
1030-HP453	3.1-110
1030-HP454	3.1-110
1030-HP454	3.1-120
1030-HP488	3.1-120
1030-HP511	3.1-120
1030-U1	3.1-110
1031-SU107	2.1-210
1038-HP298	3.5-110
1038-HP299	3.5-110
1038-HP353	3.5-110
1038-HP437	3.5-110
1039-U10	2.1-150
1039-U11	2.1-150
1039-U18	2.1-150
1039-U25	2.1-150
1046-U2	2.1-140
1046-U4	2.1-140
1049-18-L	1.3-160
1049-19-L	1.3-160
1049-U1	1.3-130
1049-U2	1.3-130
1049-U3	1.3-160
1049-U4	1.3-160
1049-U5	1.3-160
1049-U6	1.3-160
1049-U7	1.3-160
1049-U8	1.3-160
1049-U9	1.3-160
1049-U12	1.3-160
1049-U13	1.3-160
1049-U14	1.3-160
1049-U15	1.3-160
1049-U16	1.3-160
1049-U17	1.3-160
1049-U19	1.3-130
1049-U20	1.3-130
1053-U1	1.2-450
1053-U2	1.2-450
1053-U3	1.2-450
1053-U4	1.2-450
1053-U5	1.2-450
1053-U6	1.2-450
1054-U4	2.1-160
1054-U5	2.1-160
1054-U5-PH	2.1-160
1054-U7	2.1-160
1054-U10	2.1-160
1054-U18	2.1-160
1054-U19	2.1-160
1054-U20	2.1-160
1054-U21	2.1-160
1054-U22	2.1-160
1054-U27	2.1-160
1054-U28	2.1-160
1054-U29	2.1-160
1054-U33-01	2.1-170
1054-U33-02	2.1-170
1054-U34-01	2.1-170
1054-U34-02	2.1-170
1054-U35-01	2.1-170
1054-U35-02	2.1-170
1054-U36-LI	2.1-180
1054-U36-RE	2.1-180
1054-U39	2.1-190
1056-U5-PH	2.1-120
1056-U6-01	2.2-120
1056-U9-PH	2.1-120
1056-U10-01	2.2-120
1056-U13-PH	2.1-130
1056-U14-01	2.2-120
1056-U15	2.1-110
1056-U16	2.1-110
1056-U17	2.1-110
1056-U17-PH	2.1-110
1056-U18	2.1-110
1056-U59-PH	2.1-130
1056-U110	2.2-110
1068-U1	1.3-130
1068-U2	1.3-130
1080-01	1.3-120
1080-02	1.3-120
1080-U1	1.3-120
1085-SU6	1.2-440
1085-SU7	1.2-440
1085-SU8	1.2-430
1085-U1	1.2-430
1091-29C	1.3-138
1091-91	1.6-140
1091-92	1.6-140
1091-93	1.6-140
1091-103-01	1.6-140
1091-103-02	1.6-140
1091-103-03	1.6-140
1091-105	1.6-150
1091-106	1.6-150
1091-132-01G	1.3-136
1091-132-02G	1.3-136
1091-133	1.3-138
1091-U144	1.6-150
1091-U146	2.1-184
1091-U147	2.1-184
1091-U158-25	1.3-136
1091-U158-50	1.3-136
1091-U158-75	1.3-136
1091-U158-100	1.3-136
1091-U159	1.3-134
1091-U160	1.3-134
1091-U161	1.3-134
1091-U168	2.1-186
1091-U169	2.1-186
1095-05	1.6-105
1095-05	1.6-110
1095-06	1.6-105
1095-06	1.6-110
1095-19	1.6-105
1095-19	1.6-110
1095-26-100AA	1.6-120
1095-26-100KB	1.6-120
1095-26-100NA	1.6-120
1095-26-112AA	1.6-120
1095-26-112KB	1.6-120
1095-26-112NA	1.6-120
1095-26-112PC	1.6-120
1095-26-128AA	1.6-120
1095-26-128KB	1.6-120
1095-26-128NA	1.6-120
1095-26-128PC	1.6-120
1095-26-160AA	1.6-120
1095-26-160KB	1.6-120
1095-26-160NA	1.6-120
1095-26-192AA	1.6-120
1095-26-192KB	1.6-120
1095-26-192NA	1.6-120
1095-26-300AA	1.6-120
1095-26-300KB	1.6-120
1095-26-300NA	1.6-120
1095-26-400AA	1.6-120
1095-26-400KB	1.6-120
1095-26-400NA	1.6-120
1095-26-500AA	1.6-120
1095-26-500KB	1.6-120
1095-26-500NA	1.6-120
1095-27-112AA	1.6-120
1095-27-112KB	1.6-120
1095-27-112NA	1.6-120
1095-27-128AA	1.6-120
1095-27-128KB	1.6-120
1095-27-128NA	1.6-120
1095-27-160AA	1.6-120
1095-27-160KB	1.6-120
1095-27-160NA	1.6-120
1095-28-116AA	1.6-120
1095-28-116KB	1.6-120
1095-28-116NA	1.6-120
1095-28-116PH	1.6-120
1095-28-132AA	1.6-120
1095-28-132KB	1.6-120
1095-28-132NA	1.6-120
1095-28-164AA	1.6-120
1095-28-164KB	1.6-120
1095-28-164NA	1.6-120
1095-28-196AA	1.6-120
1095-28-196KB	1.6-120
1095-28-196NA	1.6-120
1095-33	1.6-110
1095-34	1.6-110
1095-35	1.6-105
1095-36	1.6-105
1095-37	1.6-105
1095-U32-AA	1.6-130
1095-U32-100IA	1.6-130
1095-U32-100PF	1.6-130
1095-U32-120IA	1.6-130
1095-U32-120PF	1.6-130
1095-U32-180IA	1.6-130
1095-U32-180PF	1.6-130
1102-U1	1.3-140
1102-U2	1.3-140
1102-U3	1.3-140
1102-U4	1.3-140
1102-U5	1.3-140
1102-U6	1.3-140
1102-U7	1.3-140
1102-U8	1.3-140
1102-U9	1.3-140
1102-U10	1.3-140
1102-U11	1.3-140
1102-U12	1.3-140
1103-U1	1.3-140
1103-U2	1.3-140
1103-U3	1.3-140
1103-U4	1.3-140
1103-U5	1.3-140
1103-U6	1.3-140
1103-U7	1.3-140
1103-U8	1.3-140
1103-U9	1.3-140
1103-U10	1.3-140
1103-U11	1.3-140
1103-U12	1.3-140
1103-U13	1.3-140
1103-U14	1.3-140
1103-U15	1.3-140
1103-U16	1.3-140
1103-U17	1.3-140

© EMKA Beschlagteile GmbH & Co. KG • 2018 • www.emka.com

Index by Part Number

EMKA Beschlagteile

Item no.:	Catalogue page
1103-U18	1.3-140
1103-U19	1.3-140
1103-U20	1.3-140
1103-U21	1.3-140
1103-U22	1.3-140
1103-U23	1.3-140
1103-U24	1.3-140
1103-U25	1.3-140
1103-U26	1.3-140
1103-U27	1.3-140
1103-U28	1.3-140
1103-U29	1.3-140
1103-U30	1.3-140
1103-U31	1.3-140
1103-U32	1.3-140
1103-U33	1.3-140
1103-U34	1.3-140
1103-U35	1.3-140
1103-U36	1.3-140
1103-U37	1.3-140
1103-U38	1.3-140
1103-U39	1.3-140
1103-U40	1.3-140
1130-U1	1.2-200
1130-U2	1.2-200
1130-U3	1.2-180
1130-U4	1.2-180
1130-U7	1.2-210
1130-U7-01	1.2-210
1130-U7-V	1.2-210
1130-U7-01V	1.2-210
1130-U8	1.2-210
1130-U9	1.2-210
1130-U10	1.2-190
1130-U11	1.2-190
1152-U9	1.2-114
1152-U9-01	1.2-114
1152-U10	1.2-114
1152-U10-01	1.2-114
1152-U11	1.2-114
1152-U11-01	1.2-114
1152-U12	1.2-114
1152-U12-01	1.2-114
1342-U1-01	1.2-130
1342-U1-02	1.2-130
1342-U1-03	1.2-130
1342-U2-01	1.2-130
1342-U2-02	1.2-130
1342-U2-03	1.2-130
1342-U3	1.2-130
1342-U4	1.2-130
1342-U5	1.2-130
1342-U6	1.2-130
1500-05-10	1.2-174
1500-05-15	1.2-174
1500-U343	1.2-174
1500-U345	1.2-174
1500-U347	1.2-174
1500-U546	1.2-174
1500-U548	1.2-174
1500-U550	1.2-174
1500-U570	1.2-174
1500-U572	1.2-174
1500-U574	1.2-174
1500-U773	1.2-174
1500-U774	1.2-174
1500-U776-LIPH	1.2-150
1500-U775	1.2-174
2004-401-84	1.1-128
2004-4000-84	1.1-128
2004-4000-AA	1.1-128
2004-4001-AA	1.1-128
2004-5060-783	1.1-125
2004-8001-00	1.1-125
2004-B8027	1.1-125
2004-B8031	1.1-125
2004-B8034	1.1-125
2004-B8036	1.1-125
2004-B8811	1.1-128
2004-B8825	1.1-128
2006-5133-PC	1.1-128
3000-78-PH	1.7-130
3000-78-01KA	1.7-130
3000-102-JB	1.7-130
3000-111	1.7-110
3000-111	1.7-120
3000-U301-01	1.7-130
3000-U301-02	1.7-130
3000-U301-03	1.7-130
3000-U301-04	1.7-130
3000-U303	1.7-130
3000-U304-01	1.7-110
3000-U304-02	1.7-110
3000-U304-03	1.7-110
3060-U380-BK	2.1-110
5064-U647-IK	1.1-140
5072-U805-IA	1.5-110
5072-U806-IA	1.5-110
5100-4000-BD	1.5-120
5100-4000-HA	1.5-120
5100-U830-IA	1.5-120
5100-U831-IA	1.5-120
5131-4000-AA	1.1-170
5131-4001-AA	1.1-170
5131-4064-AA	1.1-170
5131-U606-AA	1.1-160
5131-U638-AA	1.1-160
5131-U644-AA	1.1-160
5131-U649-AA	1.1-150
5131-U659-AA	1.1-150
5131-U758-AA	1.1-160
5177-U200-AA	1.1-125
5177-U201-AA	1.1-125
5225-01-AA	1.2-250
5225-U1	1.7-140
5225-U3	1.7-140
5225-U8	1.2-250
5225-U9	1.2-270
5225-U9-01	1.2-270
5225-U10	1.2-270
5225-U10-01	1.2-270
5225-U23	1.2-280
5225-U24	1.2-280
5225-U25	1.2-280
5225-U25-01	1.2-280
5225-U31	1.2-270
5225-U200	1.2-260
5225-U302-AA	4.3-110
5225-U302-BK	4.3-110
5225-U303-AA	4.3-110
5225-U304-AA	4.3-110
5225-U306	4.3-120
5225-U306-IL	4.3-120
5225-U306-JB	4.3-120
5225-U307	4.3-120
5225-U307-IL	4.3-120
5225-U307-JB	4.3-120
5225-U400	4.3-150
5271-U600-AA	1.1-130
5271-U601-AA	1.1-130
5291-U701-IA	4.1-110
6002-U14-JQ	1.4-110
6002-U14-KA	1.4-110
6002-U14-PC	1.4-110
6002-U15-JQ	1.4-110
6002-U15-KA	1.4-110
6002-U15-PC	1.4-110
6002-U73-JQ	1.4-110
6002-U73-PC	1.4-110
6002-U74-JQ	1.4-110
6002-U75-JQ	1.4-110
6002-U76-JB	1.4-110
6002-U77-JQ	1.4-110
6002-U77-PC	1.4-110
6004-U17-JQ	1.4-130
6004-U17-PC	1.4-130
6004-U22-JQ	1.4-120
6004-U22-KA	1.4-120
6004-U22-PC	1.4-120
6004-U23-JQ	1.4-120
6004-U23-KA	1.4-120
6004-U23-PC	1.4-120
6004-U24-JQ	1.4-120
6004-U24-KA	1.4-120
6004-U24-PC	1.4-120
6004-U25-JQ	1.4-120
6004-U25-KA	1.4-120
6004-U25-PC	1.4-120
6004-U26-JQ	1.4-120
6004-U26-KA	1.4-120
6004-U37-JQ	1.4-120
6004-U37-KA	1.4-120
6004-U517-JQ	1.4-130
6004-U517-PC	1.4-130
6006-U10-JQ	1.4-140
6006-U10-PC	1.4-140
6008-U365-JQ	1.4-130
6008-U365-PC	1.4-130
6008-U865-JQ	1.4-130
6008-U865-PC	1.4-130
6010-12-JQ	1.4-140
6010-12-KA	1.4-140
6010-12-PC	1.4-140
6010-18-JQ	1.4-140
6010-18-KA	1.4-140
6010-18-PC	1.4-140
6010-20-JQ	1.4-140
6010-20-PC	1.4-140
6040-15-JQ	1.6-160
6040-15-KA	1.6-160
6040-15-PC	1.6-160
6040-15-01KA	1.6-160
6040-U19-LA	1.6-160
6040-U80-JQ	4.1-120
6040-U80-PC	4.1-120
6040-U94-JQ	1.6-170
8900-S330-03KA	4.2-120
8900-S331-03KA	4.2-110
8900-SB11-01	4.2-120
8900-SB12-01	4.2-110
9301-U500-AA	1.1-160
9301-U501-AA	1.1-160
9301-U802-AA	1.1-150
9301-U803-AA	1.1-150
9301-U804-AA	1.1-150
9301-U805-AA	1.1-150
9301-U810-AA	1.1-150
9301-U812-AA	1.1-150
9301-U813-AA	1.1-150
9301-U815-AA	1.1-150
9400-U218-AA	1.1-130
9400-U219-AA	1.1-130
9802-U810-AA	1.2-110
9822-5014-JF	1.1-128
9850-U100	1.1-128
9850-U100	1.1-130
9850-U100	1.1-160
9850-U100	1.2-110
9850-U100	1.2-120
9850-U100	1.2-130
9850-U100	1.2-140
9850-U101	1.1-128
9850-U101	1.1-130
9850-U101	1.1-160
9850-U101	1.2-110
9850-U101	1.2-120
9850-U101	1.2-130
9850-U101	1.2-140

© EMKA Beschlagteile GmbH & Co. KG • 2018 • www.emka.com

EMKA
Beschlagteile

A strong partner by your side!

www.EMKA.com

EMKA Subsidiaries Worldwide:

ALGERIA
EMKA France
Tel. +33/254/320862
emka@emka-france.com

ARMENIA
EMKA Kilit Sistemleri Metal Sanayi ve Ticaret Ltd. Şti.
Tel. +90/262/2909097
info@emkakilit.com.tr

AUSTRIA
EMKA Beschlagteile Ges.m.b.H.
Tel. +43/2143/43063
info@emka-beschlagteile.at

AUSTRALIA *
Lock Focus Pty. Ltd.
Tel. +61/3/97981322
lockf@lockfocus.com.au

AZERBAIJAN
EMKA Kilit Sistemleri Metal Sanayi ve Ticaret Ltd. Şti.
Tel. +90/262/2909097
info@emkakilit.com.tr

BELARUS
EMKA Polska Sp.Z o.o.
Tel. +48/323606026
info@emka.net

BELGIUM
EMKA Benelux B.V. Service Office
Tel. +31/413/323510
sales@emka.org

BOSNIA-HERZEGOVINA
EMKA Bosnia d.o.o. Goražde
Tel. +38/738/241310
info@emka.ba

CANADA
EMKA Inc.
Tel. +1/717/9861111
info@emkausa.com

CHILE *
NDU Ingenierieria Ltda.
Tel. +56/63/2672240
info@ndu.cl

CHINA
EMKA Industrial Hardware CO.Ltd.
Tel. +86/22/82123759
info@emka.cn

CROATIA
EMKA Okovi d.o.o.
Tel. +385/35/270073
info@emka-okovi.hr

CZECH REPUBLIC
EMKA Beschlagteile CZ
Tel. +43/214343063
info@emka-solutions.cz

DENMARK *
A/S Megatrade Beslag
Tel. +45/44916700
mega@megatrade.dk

ESTONIA
EMKA Polska Sp.Z o.o.
Tel. +48/323606026
info@emka.net

FINLAND
EMKA Scandinavia
Tel. +46/36/314130
info@emka.se

FRANCE
EMKA France
Tel. +33/254/320862
emka@emka-france.com

GEORGIA
EMKA Kilit Sistemleri Metal Sanayi ve Ticaret Ltd. Şti.
Tel. +90/262/2909097
info@emkakilit.com.tr

GREECE *
EMKA Hellas
Tel. +30/21041/83183
info@emka-hellas.com

HUNGARY
EMKA Beschlagteile
Tel. +36/1/2360032
info@emka.hu

INDIA
EMKA India P. A. Pvt. Ltd.
Tel. +91/80/48542727
info@emka.in

ISRAEL *
Kornass Mechanical Engineering
Tel. +972/76/5400789
sales@kornass.com

ITALY
EMKA Italia s.r.l. Unipersonale
Tel. +39/045/6471070
info@emka.it

JAPAN *
TOCHIGIYA Co., Ltd
Tel. +81/48/2283072
support@tochigiya.co.jp

KAZAKHSTAN
EMKA Kilit Sistemleri Metal Sanayi ve Ticaret Ltd. Şti.
Tel. +90/262/2909097
info@emkakilit.com.tr

LATVIA
EMKA Polska Sp.Z o.o.
Tel. +48/323606026
info@emka.net

LITHUANIA
EMKA Polska Sp.Z o.o.
Tel. +48/323606026
info@emka.net

MEXICO
EMKA Mexico Beschlagteile
Tel. +52/44/22095217
info@emka.mx

MONTENEGRO
EMKA Bosnia d.o.o. Goražde
Tel. +38/738/241310
info@emka.ba

NETHERLANDS
EMKA Benelux B.V.
Tel. +31/413/323510
info@emka.org

NORWAY
EMKA Scandinavia
Tel. +46/36/314130
info@emka.se

POLAND
EMKA Polska Sp.Z o.o.
Tel. +48/323606026
info@emka.net

PORTUGAL
EMKA Beschlagteile Ibérica S.L.
Tel. +351/910904688
info@emka-iberica.pt

ROMANIA
S.C. EMKA Beschlagteile S.R.L.
Tel. +40/269/222700
info@emka.ro

RUSSIA *
OOO "MK Komplekt"
Tel. +7/812/4492928
info@mk-kom.ru

SERBIA
EMKA Okovi d.o.o.
Tel. +385/35/270073
info@emka-okovi.hr

SINGAPORE *
VF Fastening Systems PTE Ltd.
Tel. +65/675/23033
vincent@vffastening.com.sg

SLOVAKIA
EMKA Beschlagteile Ges.m.b.H.
Tel. +43/214343063
miro.emka@ba.telecom.sk

SOUTH AFRICA *
Enclosure Solutions
Tel. +27/11/9737260
info@enclosuresolutions.co.za

SOUTH COREA *
Geo Jeon Co. Ltd.
Tel. +82/314/335508
geojeon@emkakorea.co.kr

SPAIN
EMKA Beschlagteile Ibérica S.L.
Tel. +34/672262672
info@emka-iberica.es

SWEDEN
EMKA Scandinavia
Tel. +46/36/314130
info@emka.se

SWITZERLAND
EMKA Beschlagteile AG
Tel. +41/33/8260220
info@emka.ch

TURKMENISTAN
EMKA Kilit Sistemleri Metal Sanayi ve Ticaret Ltd. Şti.
Tel. +90/262/2909097
info@emkakilit.com.tr

TURKEY
EMKA Kilit Sistemleri Metal Sanayi ve Ticaret Ltd. Şti.
Tel. +90/262/2909097
info@emkakilit.com.tr

UAE
EMKA Middle East FZE
Tel. +971/42844528
info@emka.ae

UKRAINE
EMKA Ukraine
Tel. +38/096/7535875
info@emka.in.ua

UNITED KINGDOM
EMKA (UK) Ltd.
Tel. +44/2476/616505
info@emka.co.uk

USA
EMKA Inc.
Tel. +1/717/9861111
info@emkausa.com

UZBEKISTAN
EMKA Kilit Sistemleri Metal Sanayi ve Ticaret Ltd. Şti.
Tel. +90/262/2909097
info@emkakilit.com.tr

VIETNAM *
Terramar Engineering and Machinery (Pte.) Ltd.
Tel. +84/8/39153209
cam@terramar.com

* Agency

EMKA Production Sites:

Company Headquarters: Velbert

Goražde (Plant 1)

Wuppertal

Henriville

Arnedo

Birmingham

Mionica

Goražde (Plant 2)

www.EMKA.com

EMKA Beschlagteile GmbH & Co. KG
Langenberger Str. 32 • 42551 Velbert, Germany • Tel.: +49/2051/273-0 • Fax: +49/2051/273-128 • E-Mail: info@emka.com • www.emka.com